RECORDING REQUESTED BY AND RETURN TO:

PACIFIC GAS AND ELECTRIC COMPANY
Land Services Office
650 O Street Mail Bag 23
Fresno, CA 93760-0001

Location: City/Uninc_____
Recording Fee $_____
Document Transfer Tax $ _____
[ ] This is a conveyance where the consideration and Value is less than $100.00 (R&T 11911).
[ ] Computed on Full Value of Property Conveyed, or
[ ] Computed on Full Value Less Liens & Encumbrances Remaining at Time of Sale

_____
Signature of declarant or agent determining tax
LD
(APN 021-620-010)

ENCROACHMENT AGREEMENT

This Encroachment Agreement (this "**Agreement**") is made and entered into this ___ day of _____, 2011 by PACIFIC GAS AND ELECTRIC COMPANY, a California corporation, hereinafter called "**PG&E**", and CITY OF LEMOORE, a public body of the state of California , hereinafter called "**Owner**."

RECITALS

A. Owner is the fee title owner of certain real property within Kings County, State of California, Assessor's Parcel Number APN 021-620-010 (hereinafter, the "**Property**") legally described in **Exhibit "A"** attached hereto and made a part hereof.

B. PG&E is the owner of a certain easement and right-of-way (the "**Easement**") for the transmission of electric energy and for all other purposes connected therewith, as set forth in the Grant of Easements (1) dated September 6, 1952, and recorded in Book 537 of Official Records at page 111, and (2) dated April 9, 1962 and recorded in Book 808 of Official Records at Page 340, Kings County Records which provides in part that "no building or like structure shall be erected or constructed on the premises." The portion of the Property encumbered by the Easement is hereinafter referred to as the "**Easement Area**."

C. Owner proposes to construct concrete block sound walls including concrete foundations and other improvements associated therewith (the "**Improvements**") on the Easement

Area, the construction of which violates the prohibition against buildings or other structures contained in the Easement. The Easement Area and the portion of the Easement Area subject to such encroachment (the **"Encroachment Area"**) are legally described in **Exhibit "B"** attached hereto and made a part hereof, and are shown on the map attached as **Exhibit "C"**.

D. Owner has requested that PG&E grant permission for the construction of the Improvements within the Easement Area. PG&E has determined that the Improvements, to be constructed pursuant to plans and specifications approved by PG&E, do not interfere with the present full use of the Easement Area by PG&E, and PG&E is therefore willing to agree to allow such encroachment on the Easement Area on the terms and subject to the conditions set forth herein.

NOW, THEREFORE, in consideration of the foregoing and for other good and valuable consideration, the receipt and sufficiency of which are hereby acknowledged, Owner and PG&E hereby agree as follows:

1. Consent to Encroachment. Notwithstanding the prohibition in the Easement, PG&E hereby consents to the encroachment of the **Improvements** onto the Easement Area by various distances, in the manner and location as more specifically set forth in **Exhibit "B" and "C"** subject to the terms and conditions set forth herein. In addition, Owner shall have the right of ingress and egress over the Easement Area to obtain access to the Encroachment Area and the Improvements when necessary to fulfill Owner's obligations under this Agreement, in such areas as PG&E determines, in its sole and absolute discretion, will occasion the least practicable damage and inconvenience to PG&E, its facilities and operations.

2. Governmental Approvals. This Agreement shall not become effective, notwithstanding that it may have been executed and delivered by the parties, and Owner shall not commence any activity hereunder, unless and until the California Public Utilities Commission (the "**CPUC**") approves this Agreement by an order which is final, unconditional and unappealable (including exhaustion of all administrative appeals or remedies before the CPUC), and the terms and conditions of such CPUC approval are satisfactory to PG&E in its sole and absolute discretion. This Agreement is made subject to all the provisions of such approval, as more particularly set forth in CPUC Decision **Resolution E-4099 dated February 14, 2008** (Application No. **Advice Letter 3028-E**), in like manner as though said provisions were set forth in full herein.

3. **Termination; Restoration. PG&E may terminate Owner's rights under this Agreement, at any time, upon ninety (90) days written notice to the Owner, if PG&E, in its sole and absolute discretion, should determine that Owner's use of the Easement Area is inconsistent with PG&E's operational needs in the future, or in any way interferes with, impairs or otherwise impedes PG&E's full use of facilities installed or that may be installed by PG&E in the vicinity of the Easement Area. Upon such termination, Owner, at Owner's sole cost and expense, shall remove all Improvements that encroach upon the Easement Area and shall repair and restore the Easement Area as nearly as possible to the condition that existed prior to the construction of said Improvements. Owner shall pay the entire cost of such removal and restoration, and PG&E shall have no liability for any costs caused by or related to any such termination. If Owner fails to remove all Improvements that encroach onto the Easement Area or fail to repair or restore the Property within said ninety (90) day**

period, PG&E may perform such removal, repair or restoration as necessary and recover such costs and expenses therefore from Owner. Owner agrees to allow access to PG&E onto the Property for such purpose, and Owner shall pay all such costs and expenses within ten (10) days of receipt of an invoice therefore. Owner further acknowledge that PG&E's termination right shall not be affected by any Improvements that Owner has made to the Easement Area, regardless of the nature or extent of those Improvements. Owner understands and agrees that notwithstanding that Owner may have made a substantial investment in such improvements, Owner shall not be entitled to any compensation whatsoever for the termination of Owner's rights under this Agreement by PG&E. (Owner to initial here _____, _____).

4. Indemnification; Release.

(a) Indemnification. Owner shall, to the maximum extent permitted by law, indemnify, protect, defend and hold harmless PG&E, its parent corporation, subsidiaries and affiliates, and their respective officers, managers, directors, representatives, agents, employees, transferees, successors and assigns (each, an "**Indemnitee**" and collectively, "**Indemnitees**") from and against all claims, losses (including, but not limited to, diminution in value), actions, demands, damages, costs, expenses (including, but not limited to, experts fees and reasonable attorneys' fees and costs) and liabilities of whatever kind or nature (collectively, "**Claims**"), which arise from or are in any way connected with the occupancy or use of the Easement Area by Owner or Owner' contractors, agents, or invitees, or the exercise by Owner of its rights hereunder, or the performance of, or failure to perform, Owner's duties under this Agreement, including, but not limited to, Claims arising out of: (1) injury to or death of persons, including but not limited to employees of PG&E; (2) injury to property or other interest of PG&E, Owner or any third party; (3) violation of any applicable federal, state, or local laws, statutes, regulations, or ordinances, including all legal requirements relating to human health or the environment, and including any liability which may be imposed by law or regulation without regard to fault; excepting only with respect to any Indemnitee, any Claim arising from the sole, active negligence or willful misconduct of such Indemnitee. In the event any action or proceeding is brought against any Indemnitee for any Claim against which Owner are obligated to indemnify or provide a defense hereunder, Owner upon written notice from PG&E shall defend such action or proceeding at Owner' sole expense by counsel approved by PG&E, which approval shall not be unreasonably withheld, conditioned or delayed.

(b) Release. Owner accepts all risk relating to its occupancy and use of the Easement Area. PG&E shall not be liable to Owner for, and Owner hereby waives, releases, exonerates, discharges and covenants not to sue PG&E and the other Indemnitees from, any and all liability, whether in contract, tort or on any other basis, for any injury, damage, or loss resulting from or attributable to any occurrence on or about the Easement Area, the condition of Easement Area, the use or occupancy of the Easement Area by Owner, or PG&E's operation and maintenance of PG&E's facilities in the vicinity of the Easement Area, except in the case of any Indemnitee, any injury, damage, or loss arising from the sole, active negligence or willful misconduct of such Indemnitee.

5. Compliance with Laws. Owner shall, at its sole cost and expense, promptly comply with all laws, statutes, ordinances, rules, regulations, requirements or orders of municipal, state, and federal authorities now in force or that may later be in force, with the conditions of any permit, relating to Owner's use or occupancy of the Easement Area.

6. Alterations. Except for the Improvements authorized to be constructed pursuant to this Agreement, Owner shall not construct any additional buildings or structures on the Easement Area, nor shall Owner make any alteration, addition or improvement to the Easement Area that would increase the Encroachment Area, either horizontally or vertically. Owner shall not drill, bore or excavate on the Easement Area except in connection with construction of the Improvements pursuant to plans and specifications approved by PG&E, or a removal of the Improvements as required by this Agreement.

7. Damage or Destruction. In the event that the Improvements which encroach onto the Easement Area shall be destroyed or demolished, Owner shall not rebuild the Improvements on any part of the Easement Area except pursuant to plans and specifications approved by PG&E.

8. Condition of Easement Area. Owner accepts the Encroachment Area and the Easement Area in its existing physical condition, without warranty by PG&E or any duty or obligation on the part of PG&E to maintain the Easement Area. Owner understands that numerous hazards, environmental or otherwise, may be located in, on, or underlying the Easement Area, and that hazardous materials may be used in connection with PG&E facilities that may be operated in the Easement Area, and agrees that entry onto the Easement Area is at Owner's sole risk and expense

9. Maintenance. Owner shall be responsible for the maintenance of the Improvements in good condition and repair, and Owner shall coordinate all activities regarding the maintenance of the Improvements to reasonably minimize any interference with the use by PG&E of the Easement Area, and Owner shall conduct its activities in such a manner so as not to endanger the Easement, the environment and human health and safety. Owner shall be responsible for remediation of any hazardous materials release caused by Owner, and to clean and remove debris and/or promptly repair any damages to the Easement Area following any entry or activity by Owner, returning the Easement Area to a like or better condition.

10. Reserved Rights. PG&E reserves the right to use the Easement Area for such purposes as it may deem necessary or appropriate if, and whenever, in the interest of its service to its patrons or consumers or the public, it shall appear necessary or desirable to do so. Furthermore, PG&E reserves the right to restrict access to the Easement Area if emergency repairs or maintenance are required to PG&E facilities in the vicinity of the Easement Area.

11. Insurance. Prior to the Effective Date of this Agreement, Owner shall procure, and thereafter Owner shall carry and maintain in effect at all times the following insurance: Worker's Compensation in compliance with applicable labor codes, acts, laws or statutes, state or federal, where Owner perform work and Employer's Liability insurance with limits not be less than $1,000,000 for injury or death, each accident; Commercial General Liability for bodily injury and property damage with limits of not less than $1,000,000 each occurrence/$2,000,000 aggregate; Business Auto, code 1 "any auto" combined single limit no less than $1,000,000 each accident.

Owner is also responsible for causing its agents, contractors and subcontractors to comply with the insurance requirements of this Agreement at all relevant times.

12. Notice. Any notices or communications hereunder shall be in writing and shall be personally delivered or sent by first class mail, certified or registered, postage prepaid, or sent by national overnight courier, with charges prepaid for next business day delivery, addressed to the addressee party at its address or addresses listed below, or to such other address or addresses for a party as such party may from time to time designate by notice given to the other party. Notices shall be deemed received, if sent by personal delivery upon actual receipt by the party being sent the notice, or on the expiration of three (3) business days after the date of mailing, or on the following business day if sent by overnight courier

If to PG&E:

Pacific Gas and Electric Company
Attention: Land Agent
650 O Street Mail Bag 23
Fresno, CA 93760

With a copy to:
(By Mail)
Wendy T. Coleman, Esq.
Pacific Gas and Electric Company
P.O. Box 7442
San Francisco, CA 94120

OR

(By Courier)
Wendy T. Coleman, Esq.
Pacific Gas and Electric Company
77 Beale Street, Mail Code B30A
San Francisco, CA 94105

If to Owner:

City of Lemoore
Director of Public Works
Attention: David Wlaschin
711 W. Cinnamon Drive
Lemoore, CA 93245

13. Governing Law. This Agreement shall in all respects be interpreted, enforced, and governed by and under the laws of the State of California.

14. Entire Agreement. This Agreement and the Deed, supersedes all previous oral and written agreements between and representations by or on behalf of the parties and constitutes the

entire agreement of the parties with respect to the subject matter hereof. This Agreement may not be amended except by a written agreement executed by the parties.

15. Binding Effect. This Agreement and the covenants and agreements contained herein shall be binding upon, and shall inure to the benefit of, the parties hereto and their respective heirs, successors and assigns (subject to the provisions of Section 17 below). No assignment or delegation by Owner, whether by operation of law or otherwise, shall relieve Owner of any of its duties, obligations or liabilities hereunder, in whole or in part. The covenants of Owner hereunder shall run with the land.

16. Assignment. This Agreement and the rights of Owner hereunder are appurtenant to the Property presently owned by Owner and may not be separately assigned, transferred, conveyed or encumbered. Any purported assignment, transfer, conveyance or encumbrance violating the foregoing condition shall be void and of no effect.

17. Attorneys' Fees. Should either party bring an action against the other party, by reason of or alleging the failure of the other party with respect to any or all of its obligations hereunder, whether for declaratory or other relief, then the party which prevails in such action shall be entitled to its reasonable attorneys' fees (of both in-house and outside counsel) and expenses related to such action, in addition to all other recovery or relief. A party shall be deemed to have prevailed in any such action (without limiting the generality of the foregoing) if such action is dismissed upon the payment by the other party of the sums allegedly due or the performance of obligations allegedly not complied with, or if such party obtains substantially the relief sought by it in the action, irrespective of whether such action is prosecuted to judgment.

18. Survival of Obligations. Owner's obligations under Sections 3 and 4 of this Agreement, and all representations, warranties, indemnities or other provisions which by their nature survive termination shall survive the exercise of PG&E's termination rights pursuant to Section 3 of this Agreement.

19. No Waiver. No waiver with respect to any provision of this Agreement shall be effective unless in writing and signed by the party against whom it is asserted. No waiver of any provision of this Agreement by a party shall be construed as a waiver of any subsequent breach or failure of the same term or condition, or as a waiver of any other provision of this Agreement.

20. Captions. The captions in this Agreement are for reference only and shall in no way define or interpret any provision hereof.

21. Counterparts. This Agreement may be executed in identical counterpart copies, each of which shall be an original, but all of which taken together shall constitute one and the same agreement.

22. Recording. Owner hereby consents and agrees to the recording by PG&E of this Agreement against the Property. Owner agrees to sign any additional documents reasonably required to complete such recording.

23. Ratification of Deed. Except as modified by this Agreement in regard to the Property, all of the terms, conditions and provisions of the Deed shall remain in full force and effect and are hereby ratified and confirmed. To the extent the terms of the Deed are inconsistent with this Agreement, the terms of this Agreement shall control.

IN WITNESS WHEREOF, the parties have executed this Agreement as of the day and year first set forth above.

"PG&E"

PACIFIC GAS AND ELECTRIC COMPANY,
a California corporation

_____

By: Marvin Penner
Its: Manager, Land Management
Land and Environmental Management

"Owner"

CITY OF LEMOORE,

By: _____
Jeff Briltz, City Manager

State of California
County of _____)

On _____, before me, _____
Here insert name and title of the officer
_____,
personally appeared _____

_____

_____, who proved to me on the basis of satisfactory evidence to be the person(s) whose name(s) is/are subscribed to the within instrument and acknowledged to me that he/she/they executed the same in his/her/their authorized capacity(ies), and that by his/her/their signature(s) on the instrument the person(s), or the entity upon behalf of which the person(s) acted, executed the instrument.

I certify under PENALTY OF PERJURY under the laws of the State of California that the foregoing paragraph is true and correct.

WITNESS my hand and official seal.

_____ (Seal)
Signature of Notary Public

CAPACITY CLAIMED BY SIGNER

[ ] Individual(s) signing for oneself/themselves

[ ] Corporate Officer(s) of the above named corporation(s)

[ ] Trustee(s) of the above named Trust(s)

[ ] Partner(s) of the above named Partnership(s)

[ ] Attorney(s)-in-Fact of the above named Principal(s)

[ ] Other _____

Area 4 – Fresno LSO
Electric Transmission
Encroachment Agreement
MDB&M, T19S, R20E,
SEC. 3, W ½ of NW ¼
FERC # N/A
Drawing # Exhibit B
AF/~~RE~~: 2219-20-0045 & 0046
Type of Interest 2,11b,42
SBE# N/A
% of Quitclaim N/A
PM# 40619158– OP#0050
JCN# N/A
County Fresno
851 Approval Application No.3028-E Decision E-4099
Utility Notice #
Prepared By Kap
Checked By FW

EXHIBIT "A"
Legal Description of Existing Parcels

All of the real property situated in the City of Lemoore, County of Kings, State of California, described as follows:

Lots 82 and 147 and Outlots A and F of Tract Number 821, Liberty, Phase 1, according to the map thereof recorded June 20, 2006, in Volume 21 of Licensed Surveyor's Plats, at Page 78, Kings County Records.

LICENSED LAND SURVEYOR
CRAIG E. BAUM
No. 7680
STATE OF CALIFORNIA

EXP. 31 DEC 06

EXHIBIT "B"
Legal Description of PG& E Easement Encroachments

Location 1

A portion of Lot 147 and a portion of Outlot A of Tract Number 821, Liberty", Phase 1, according to the map thereof recorded June 20, 2006, in Volume 21 of Licensed Surveyor's Plats at Page 78, Kings County Records, situated in the City of Lemoore, County of Kings, State of California, and being more particularly described as follows:

Beginning at the point of intersection of the westerly line of said Lot 147 with the northeasterly line of that pole line easement granted to the Pacific Gas and Electric Company as per the deed recorded October 3, 1952, in Book 537 at Page 111, Kings County Records, said point bears North 00°30'57" East a distance of 45.60 feet from the southwest corner of said Lot 147; thence

1) South 44°14'58" East, along the northeasterly line of said pole line easement, a distance of 5.68 feet to a line parallel with and 4.00 feet easterly (measured at right angles) from the westerly line of said Lot 147; thence

2) South 00°33'47" West, along said parallel line, a distance of 34.19 feet to a line parallel with and 4.00 feet northwesterly (measured at right angles) from the southeasterly line of said Lot 147; thence

3) North 57°27'07" East, along the last said parallel line, a distance of 24.59 feet to the northeasterly line of said pole line easement; thence

4) South 44°14'58" East, along said northeasterly line, a distance of 6.13 feet to a line parallel with and 2.00 feet southeasterly (measured at right angles) from the southeasterly line of said Lot 147; thence

5) South 57°27'07" West, along the last said parallel line, a distance of 34.51 feet to the westerly line of said Outlot A; thence

6) North 00°30'57" East, along the westerly lines of said Outlot A and Lot 147, a distance of 47.99 feet to the Point of Beginning.

Location 2

A portion of Lot 82 and a portion of Outlot F of Tract Number 821, Liberty", Phase 1, according to the map thereof recorded June 20, 2006, in Volume 21 of Licensed Surveyor's Plats at Page 78, Kings County Records, situated in the City of Lemoore, County of Kings, State of California, and being more particularly described as follows:

Beginning at the point of intersection of the easterly line of said Lot 82 with the northerly line of that pole line easement granted to the Pacific Gas and Electric Company as per the deed recorded October 3, 1952, in Book 537 at Page 111, Kings County Records, said point bears North 00°33'47" East a distance of 25.00 feet from the east-southeasterly corner of said Lot 82; thence

1) North 89°55'47" East, along the northerly line of said pole line easement, a distance of 4.00 feet to a line parallel with and 4.00 feet easterly (measured at right angles) from the easterly line of said Lot 82; thence

2) South 00°33'47" West, along said parallel line, a distance of 25.05 feet; thence

3) North 89°26'13" West, at right angles to the easterly line of said Lot 82, a distance of 7.00 feet to a line parallel with and 3.00 feet westerly (measured at right angles) from the easterly line of said Lot 82; thence

4) North 00°33'47" East, along the last said parallel line, a distance of 24.97 feet to the northerly line of the afore-said pole line easement; thence

5) North 89°55'47" East, along said northerly line, to the Point of Beginning.

Containing a total of approximately 517 square feet.

LICENSED LAND SURVEYOR
CRAIG E. BAUM
No. 7680
STATE OF CALIFORNIA

3/10/06

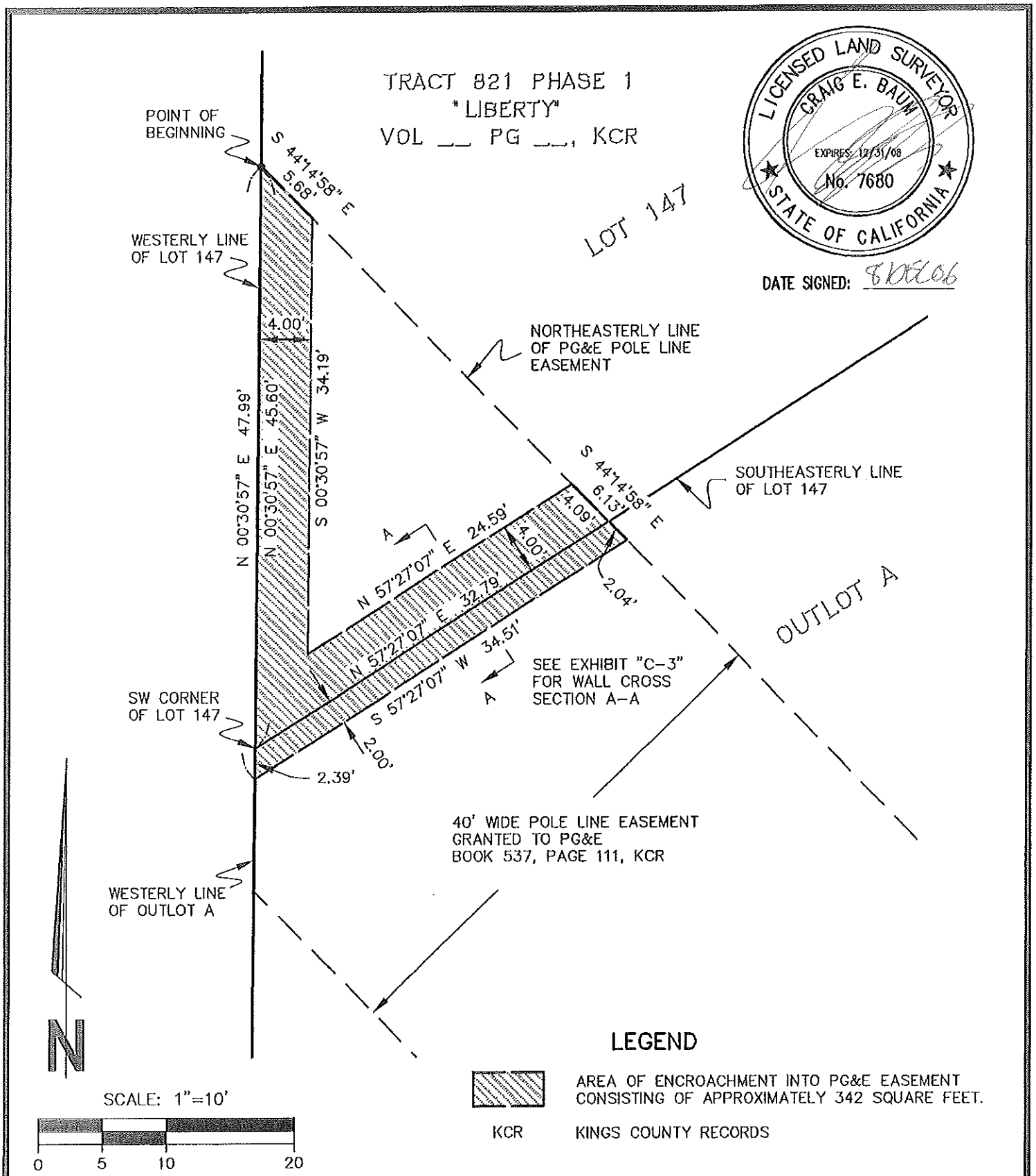

EST. 1968
PROVOST & PRITCHARD INC
ENGINEERING GROUP
An Employee Owned Company

EXHIBIT "C-1"

PG&E ENCROACHMENT
TRACT 821 PHASE 1
LOT 147 & OUTLOT A

APPROVED BY: CEB	DATE: 12-7-06
DRAWN BY: JDL	SCALE: 1"=10'
CHECKED BY: CEB	REVISION:
DRAWING NO: PGE_Wall_Exhibits	

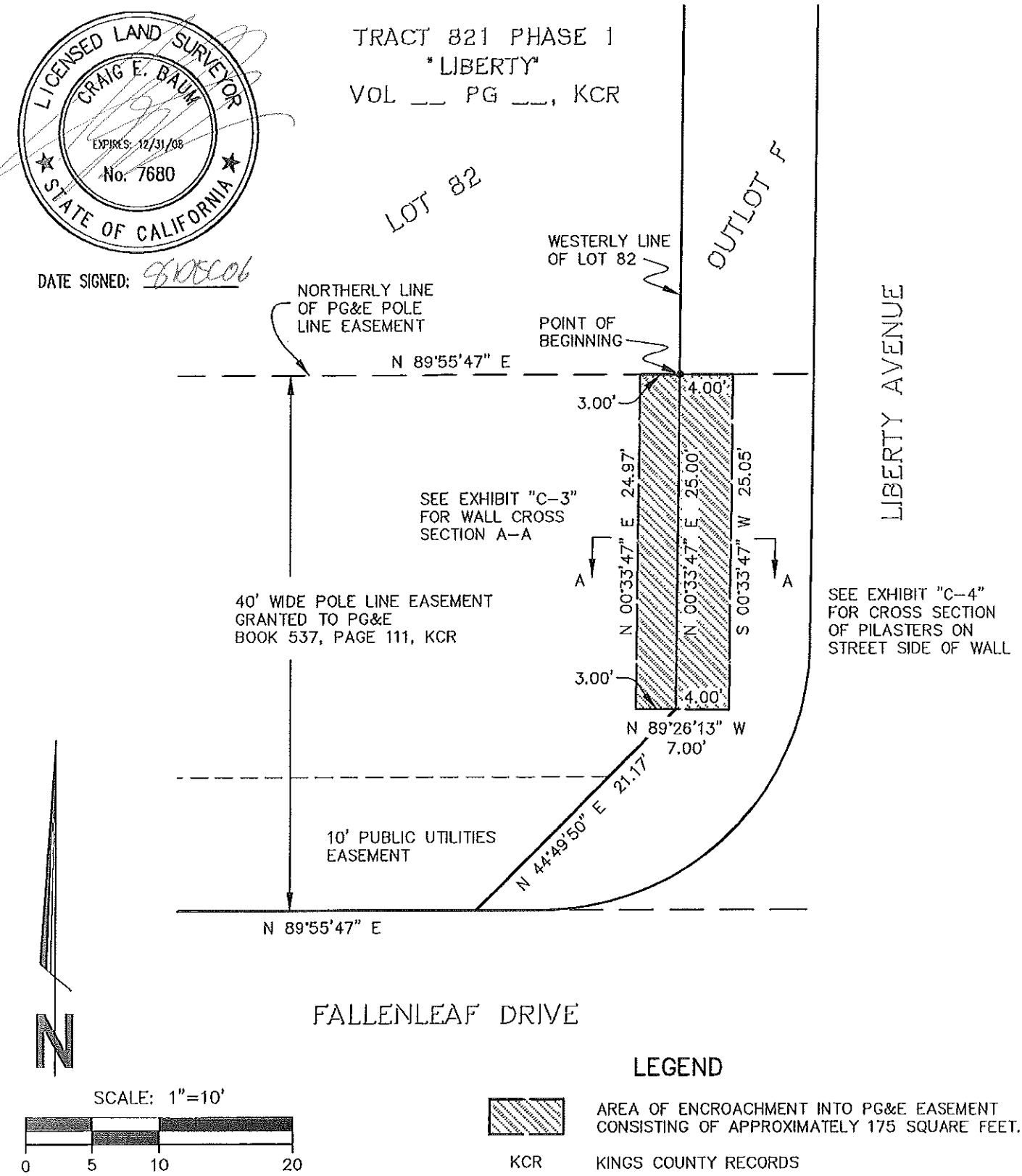

EST. 1968
PROVOST & PRITCHARD INC
ENGINEERING GROUP
An Employee Owned Company

EXHIBIT "C-2"

PG&E ENCROACHMENT
TRACT 821 PHASE 1
LOT 82 & OUTLOT F

APPROVED BY: CEB	DATE: 12-7-06
DRAWN BY: JDL	SCALE: 1"=10'
CHECKED BY: CEB	REVISION:
DRAWING NO: PGE_Wall_Exhibits	

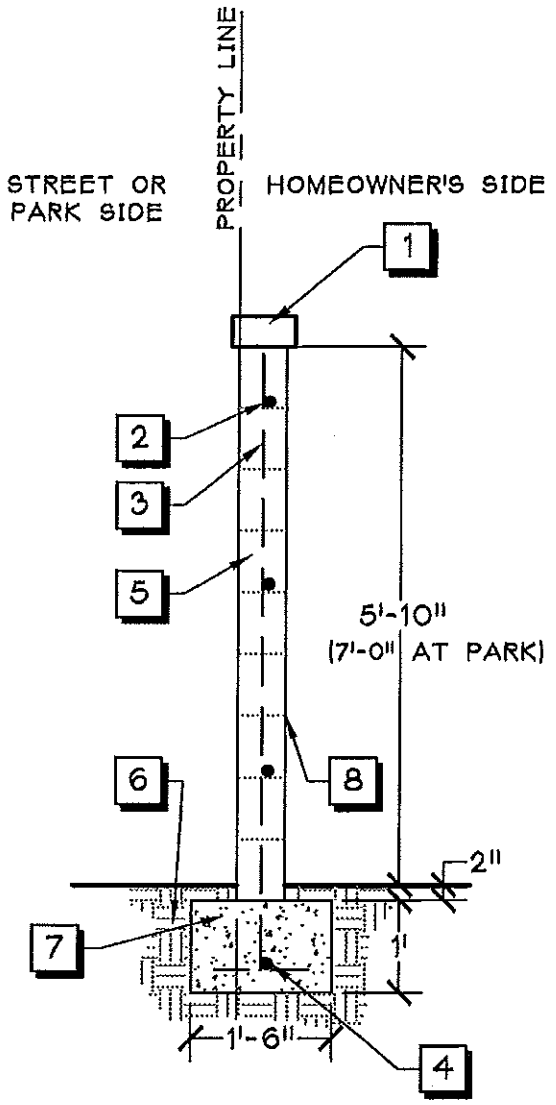

1. 8x4x16 SLUG
2. #4 REBAR @24" O.C. - HORIZONTALLY
3. #4 REBAR @ 32" O.C. - VERTICALLY
4. #4 REBAR; CONT. IN FOOTING, HOLD MIN. 3" CLEAR FROM ALL EDGES OF FOOTING
5. 6x8x16 SPLIT FACE CMU BLOCK (ONE SIDED - SPLIT FACE SIDE TO FACE STREET, TYP.) BLOCK TO BE BLOCKLITE MODEL S-193 (R)
6. COMPACTED SUBGRADE
7. CONCRETE FOOTING
8. RAKED GROUT JOINTS AT BACK OF WALL

(A) PROJECT WALL

SCALE: 1/2" = 1'-0"

EST. 1968 PROVOST & PRITCHARD INC. ENGINEERING GROUP An Employee Owned Company	EXHIBIT "C-3"	APPROVED BY:	DATE: 12-7-06
		DRAWN BY: JDL	SCALE: 1/2"=1'-0"
	PG&E ENCROACHMENT TRACT 821 PHASE 1 TYPICAL WALL SECTION A-A	CHECKED BY:	REVISION:
		DRAWING NO: PGE_Wall_Exhibits	

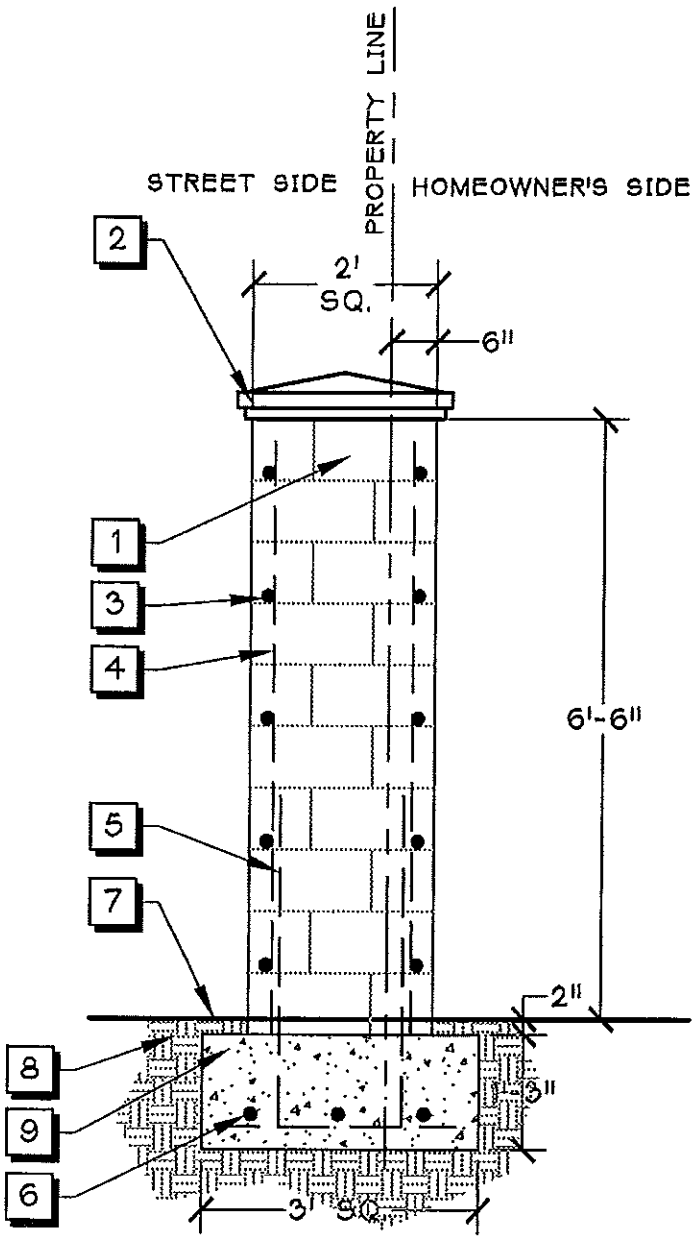

1. 8x8x16 SPLIT FACE CMU BLOCK. BLOCKLITE MODEL S-193 (R). GROUT FILL CELLS W/ VERTICAL REINFORCEMENT SOLID
2. PRECAST CONCRETE CAP; MODEL PC002B (26x6x26), COLOR TO BE MESA BUFF. AVAIL. THROUGH CLOVIS STONE 298-6750
3. #4 REBAR @ 16" O.C. - HORIZONTALLY
4. #4 REBAR - VERTICALLY. (1) ONE IN EACH CORNER
5. #4 REBAR DOWELS. 40-BAR-DIAMETER LAP MINIMUM
6. (3) #4 REBAR IN FOOTING (BOTH WAYS). HOLD MIN. 3" CLEAR FROM ALL EDGES OF FOOTING
7. FINISHED GRADE
8. COMPACTED SUBGRADE
9. CONCRETE FOOTING

B PILASTERS

SCALE: 1/2" = 1'-0"

EST. 1968 PROVOST & PRITCHARD INC. ENGINEERING GROUP An Employee Owned Company	EXHIBIT "C-4"	APPROVED BY:	DATE: 12-7-06
		DRAWN BY: JDL	SCALE: 1/2"=1'-0"
	PG&E ENCROACHMENT TRACT 821 PHASE 1 TYPICAL PILASTER SECTION	CHECKED BY:	REVISION:
		DRAWING NO: PGE_Wall_Exhibits	