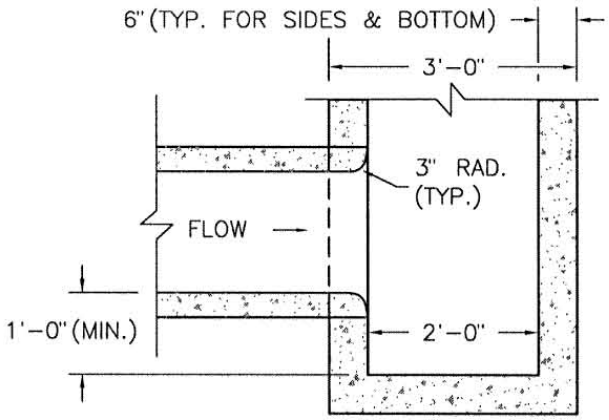

SECTION OF OUTLET

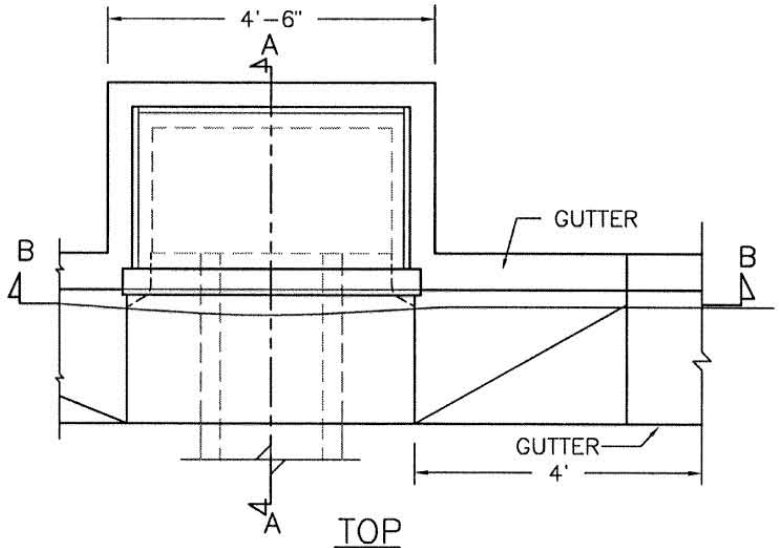

TOP
INLET

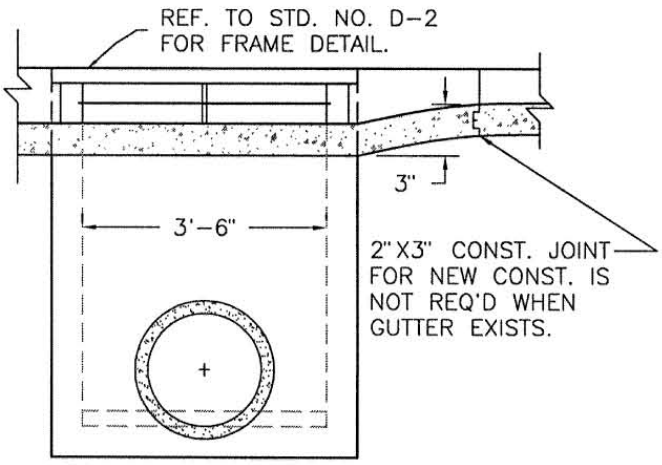

SECTION B-B FRONT
INLET
(CUTTING PLANE IS AT FLOWLINE)

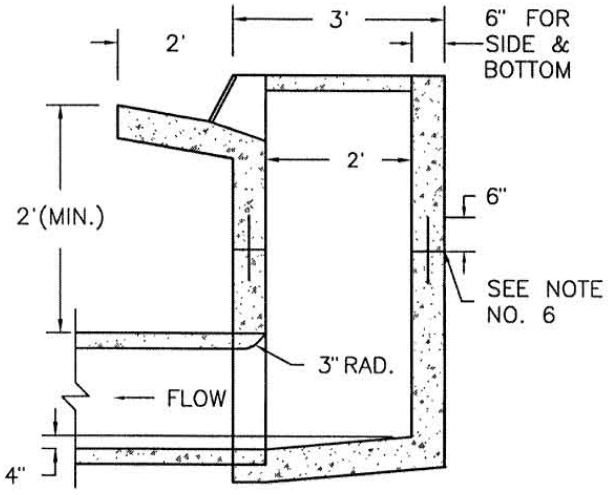

SECTION A-A
INLET

NOTES FOR OUTLET ONLY

A. AN OUTLET STRUCTURE THROAT SHALL BE FORMED WITH 6 INCHES FROM FLOWLINE TO TOP OF CURB.

B. ELIMINATE THE 1/2" DIA. STEEL ROD FROM THE THROAT FORM.

NOTES FOR INLET & OUTLET

1. THE INLET OR OUTLET MAY BE MODIFIED SLIGHTLY TO MATCH EXISTING IMPROVEMENTS, AS DIRECTED BY THE ENGINEER.
2. STRUCTURE SHALL BE CLASS "A" CONCRETE. EXPOSED SURFACE SHALL BE FINISHED AS PER CURB SPECIFICATIONS.
3. CURB AND GUTTER SHALL BE RECONSTRUCTED ON EACH SIDE OF BOX AS INDICATED ON THE PLANS.
4. THE FLOOR OF THE INLET SHALL SLOPE FROM ALL WALLS TO THE LATERAL FLOWLINE AND BE GIVEN A STEEL TROWELED FINISH.
5. AT THE CONTACT POINT OF THE STRUCTURE WALL AND THE LATERAL A SMOOTH 3" RADIUS CURVE SHALL BE CONSTRUCTED.
6. IF THE STRUCTURE IS CONSTRUCTED IN A TWO-STAGE POUR, PROVIDE A ROUGHENED CONSTRUCTION JOINT AND PLACE ONE NO.4 BAR, 1 FOOT LONG, IN EACH OF THE FOUR WALLS, AS SHOWN.
7. APPROVED EQUAL: CHRISTY U36 PRE-CAST CONCRETE CATCH BASIN WITH U37 PRE-CAST CONCRETE CURB INLET.

42" CURB DRAIN INLET OR OUTLET	Rev.	Date: 10/1/03 Gary A. Tom City Engineer	STD. NO. D-1

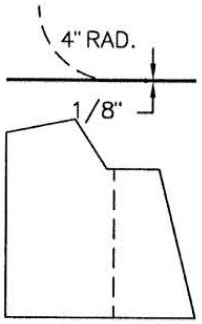

SIDE PLATE

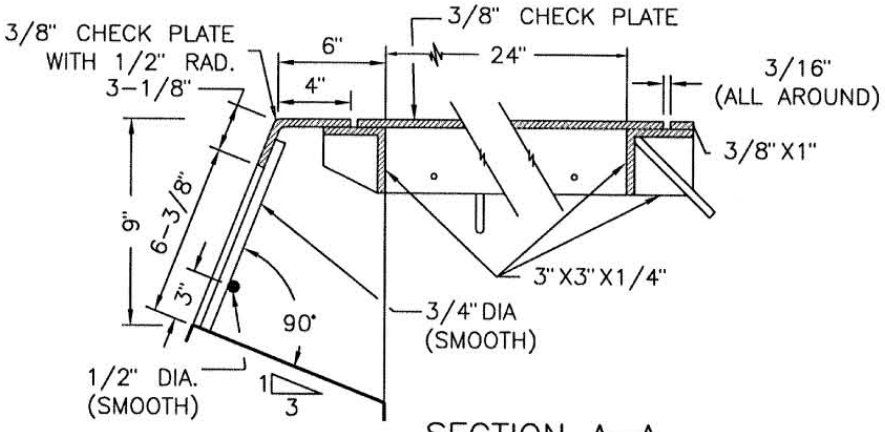

SECTION A–A
(ENLARGED)

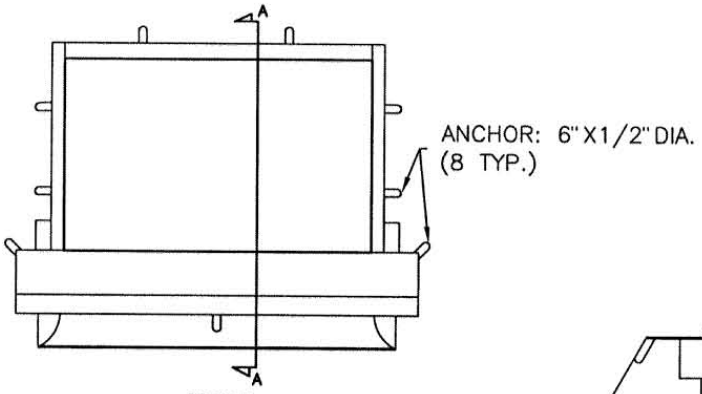

TOP

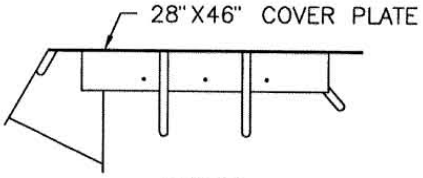

SIDE

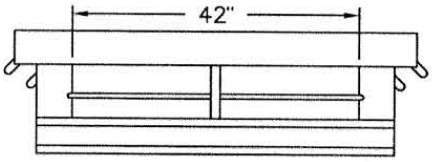

FRONT

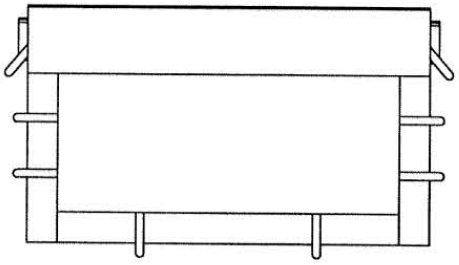

BOTTOM

NOTES:

1. ALL PARTS SHALL BE STRUCTURAL GRADE STEEL.
2. ALL PARTS, EXCEPT COVER, SHALL BE WELDED TO THE SPECIFICATIONS OF THE ENGINEER.
3. ALL EXPOSED METAL PARTS SHALL BE PAINTED PER THE STANDARD SPECIFICATIONS FOR PAINTING.

TYPE "D" INLET THROAT FORM & FRAME	Rev.	Date: 10/1/03 City Engineer	STD. NO. D-2

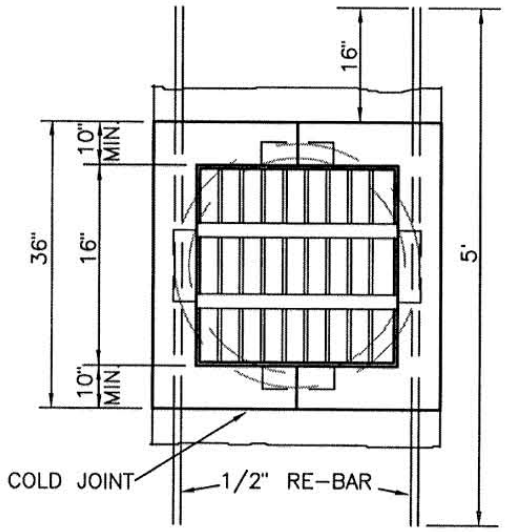

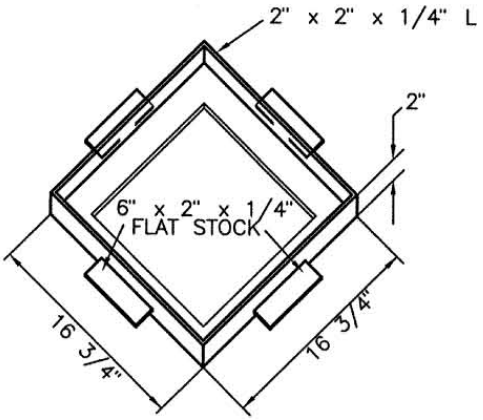

FRAME DETAIL

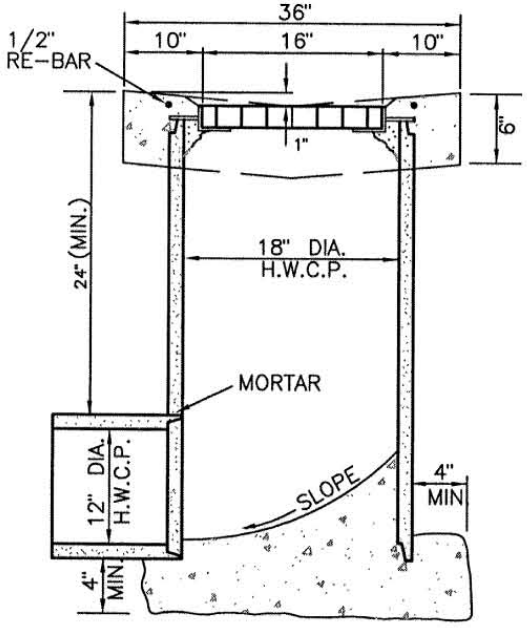

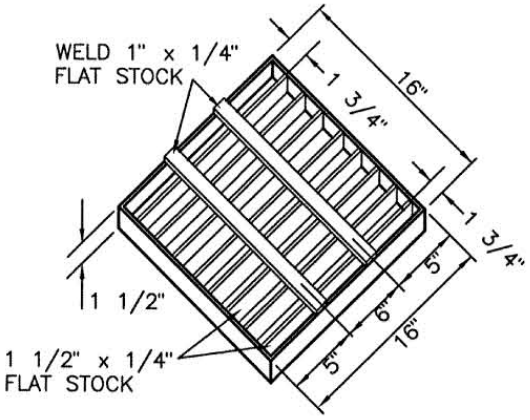

GRATE DETAIL

NOTE:

ALL CONCRETE SHALL BE CLASS "A" CONC. (6 SACK MIX)

"V" GUTTER CATCH BASIN	Rev.	Date: 10/1/03 Gary A. Tow City Engineer	STD. NO. D-3

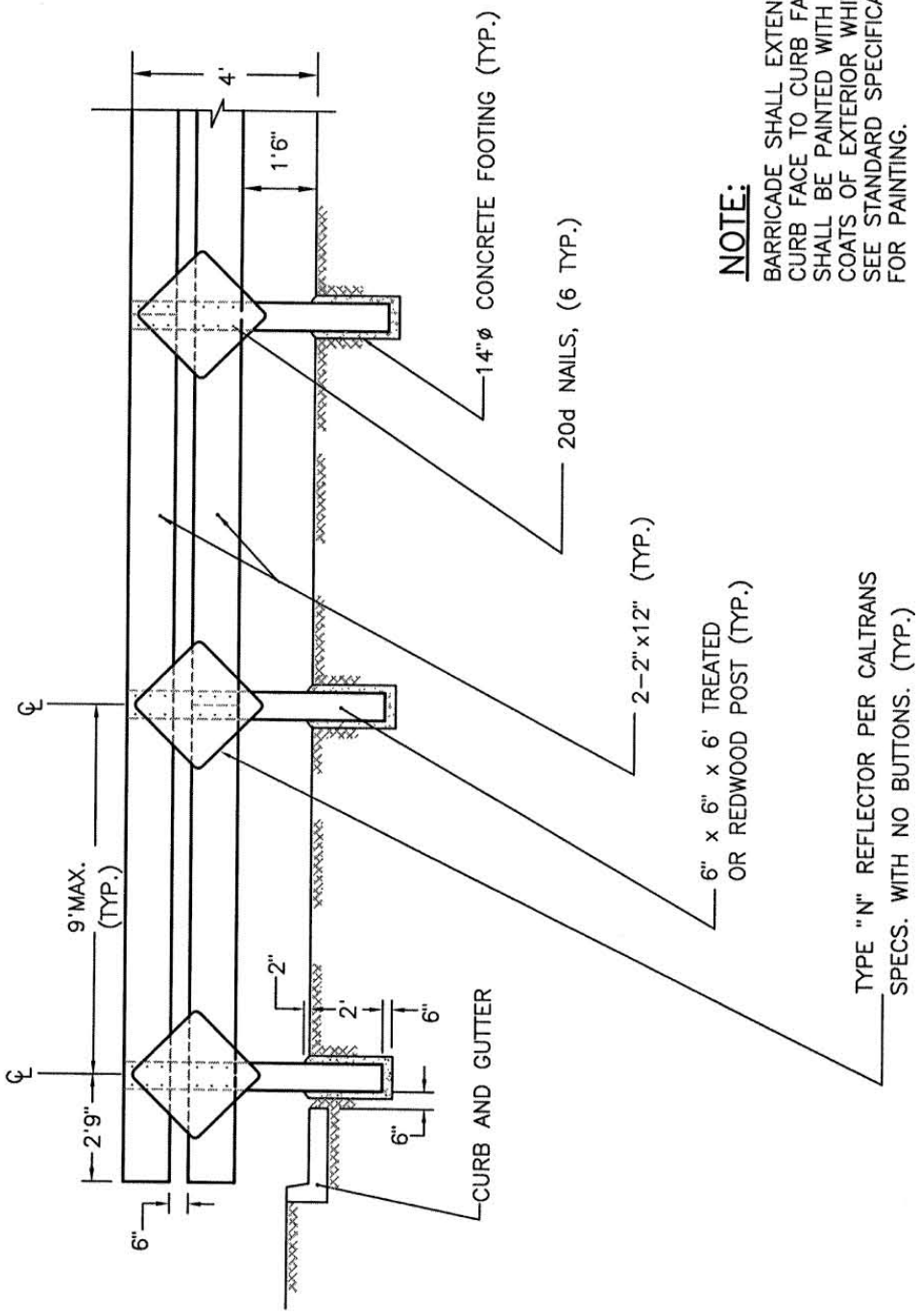

NOTE:

BARRICADE SHALL EXTEND FROM CURB FACE TO CURB FACE AND SHALL BE PAINTED WITH TWO COATS OF EXTERIOR WHITE PAINT. SEE STANDARD SPECIFICATIONS FOR PAINTING.

TEMPORARY BARRICADE	Rev.	Date: 10/1/03 Gary G. Tow City Engineer	STD. NO. M-1

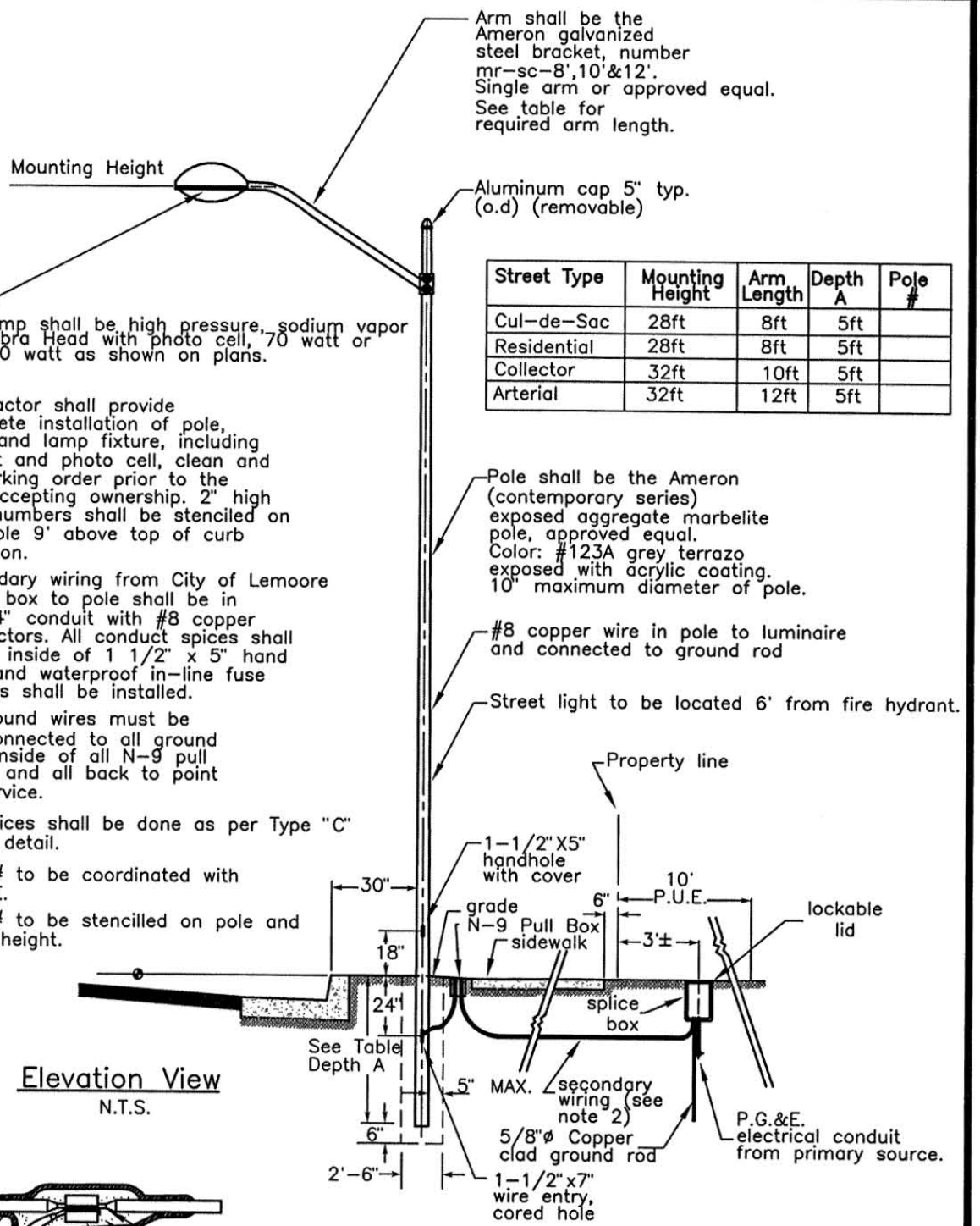

NOTES:

1. Contractor shall provide complete installation of pole, arm, and lamp fixture, including ballast and photo cell, clean and in working order prior to the City accepting ownership. 2" high pole numbers shall be stenciled on the pole 9' above top of curb elevation.
2. Secondary wiring from City of Lemoore splice box to pole shall be in 1-1/4" conduit with #8 copper conductors. All conduct spices shall occur inside of 1 1/2" x 5" hand hole and waterproof in-line fuse holders shall be installed.
3. All ground wires must be interconnected to all ground rods inside of all N-9 pull boxes and all back to point of service.
4. All splices shall be done as per Type "C" splice detail.
5. Pole # to be coordinated with P.G.&E.
6. Pole # to be stencilled on pole and 2" in height.

Street Type	Mounting Height	Arm Length	Depth A	Pole #
Cul-de-Sac	28ft	8ft	5ft	
Residential	28ft	8ft	5ft	
Collector	32ft	10ft	5ft	
Arterial	32ft	12ft	5ft	

STREET LIGHT	Rev.	Date: 10/1/03 City Engineer	STD. NO. M-2

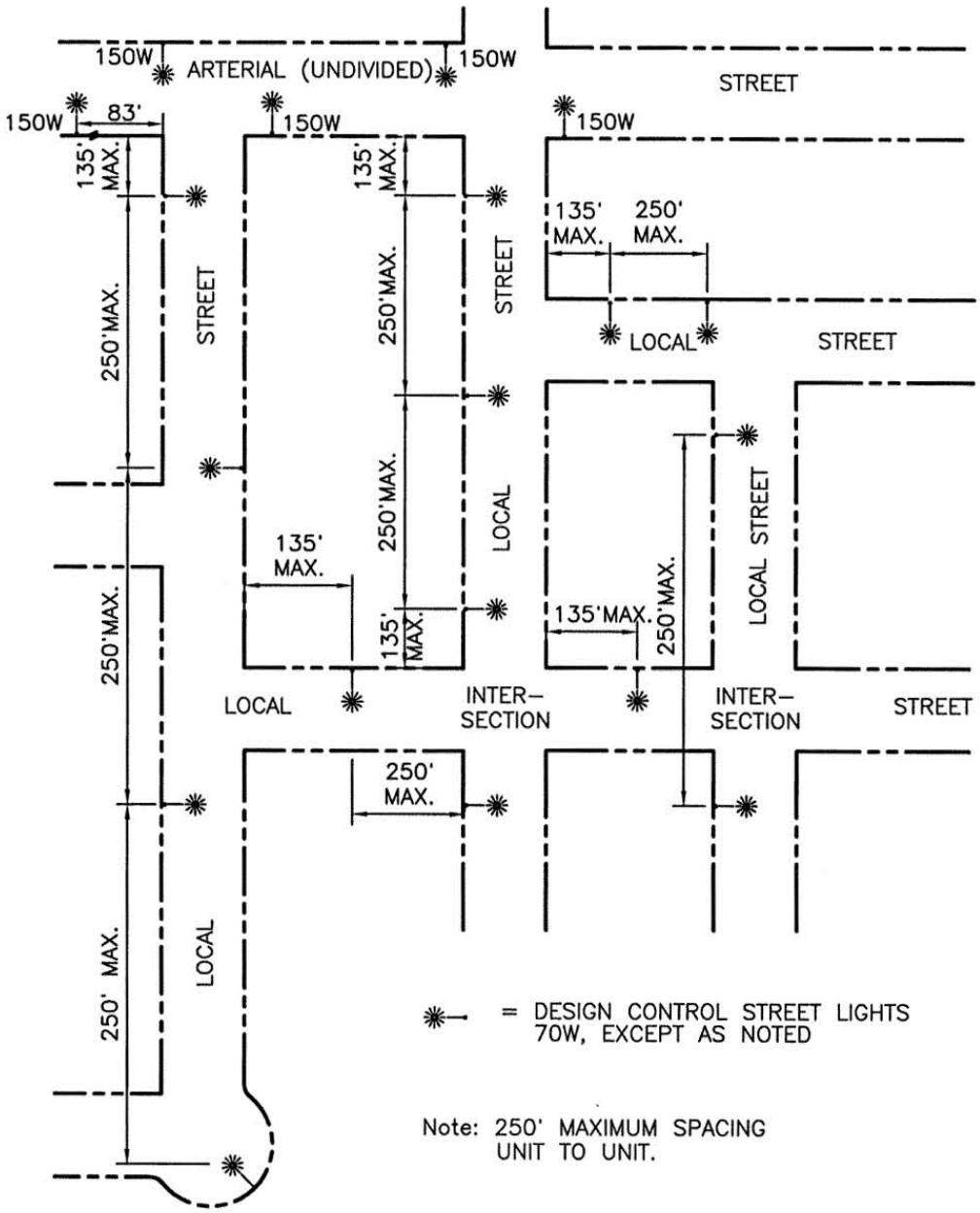

STREET LIGHT PLACEMENT LOCAL STREETS	Rev.	Date: 10/1/03 City Engineer	STD. NO. M-2A

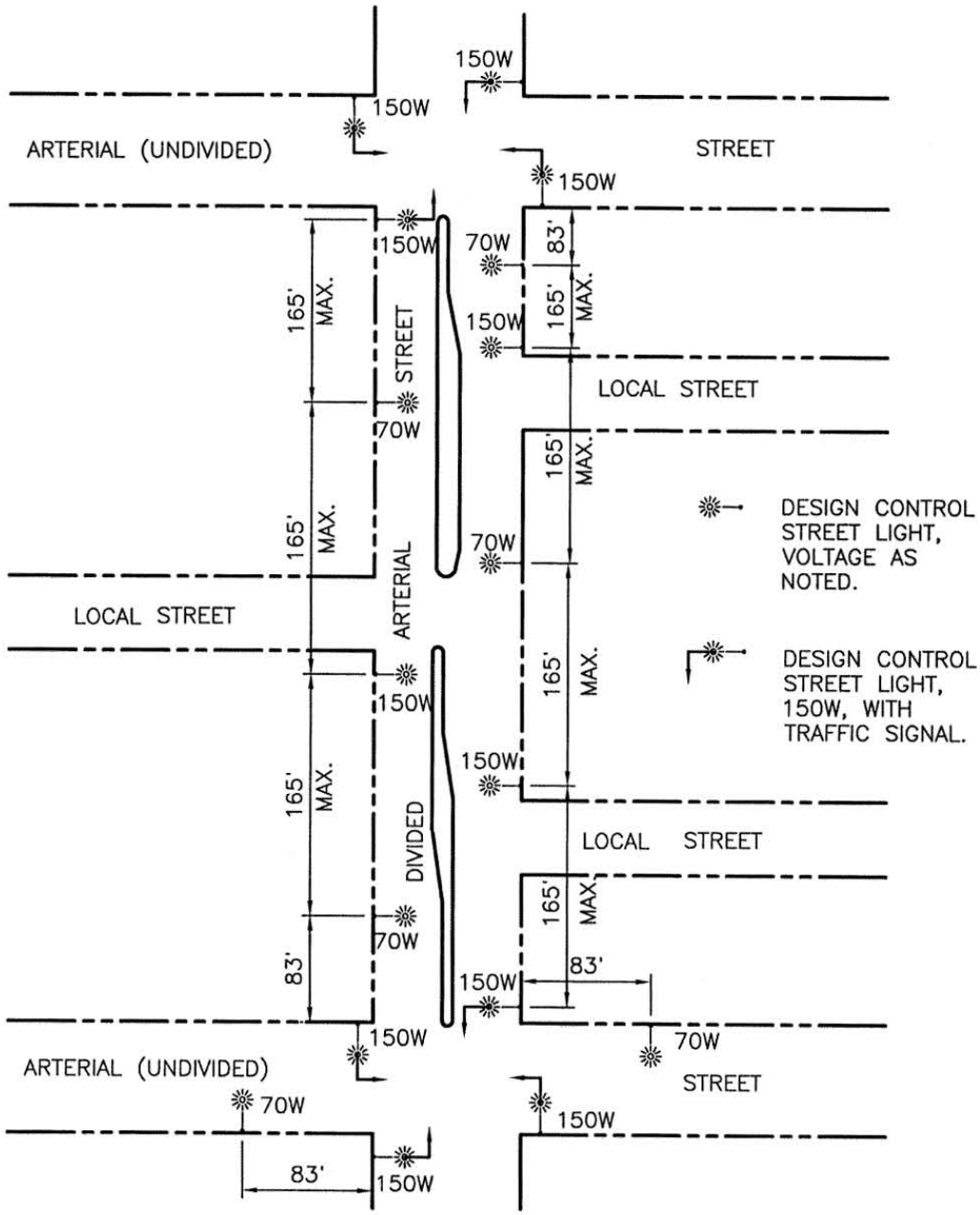

NOTE:

INDIVIDUAL SYSTEMS ON EACH SIDE WITH 165ft. MAX. SPACING ON EACH SIDE.

STREET LIGHT PLACEMENT DIVIDED ARTERIAL STREETS	Rev.	Date: 10/1/03 City Engineer	STD. NO. M-2B

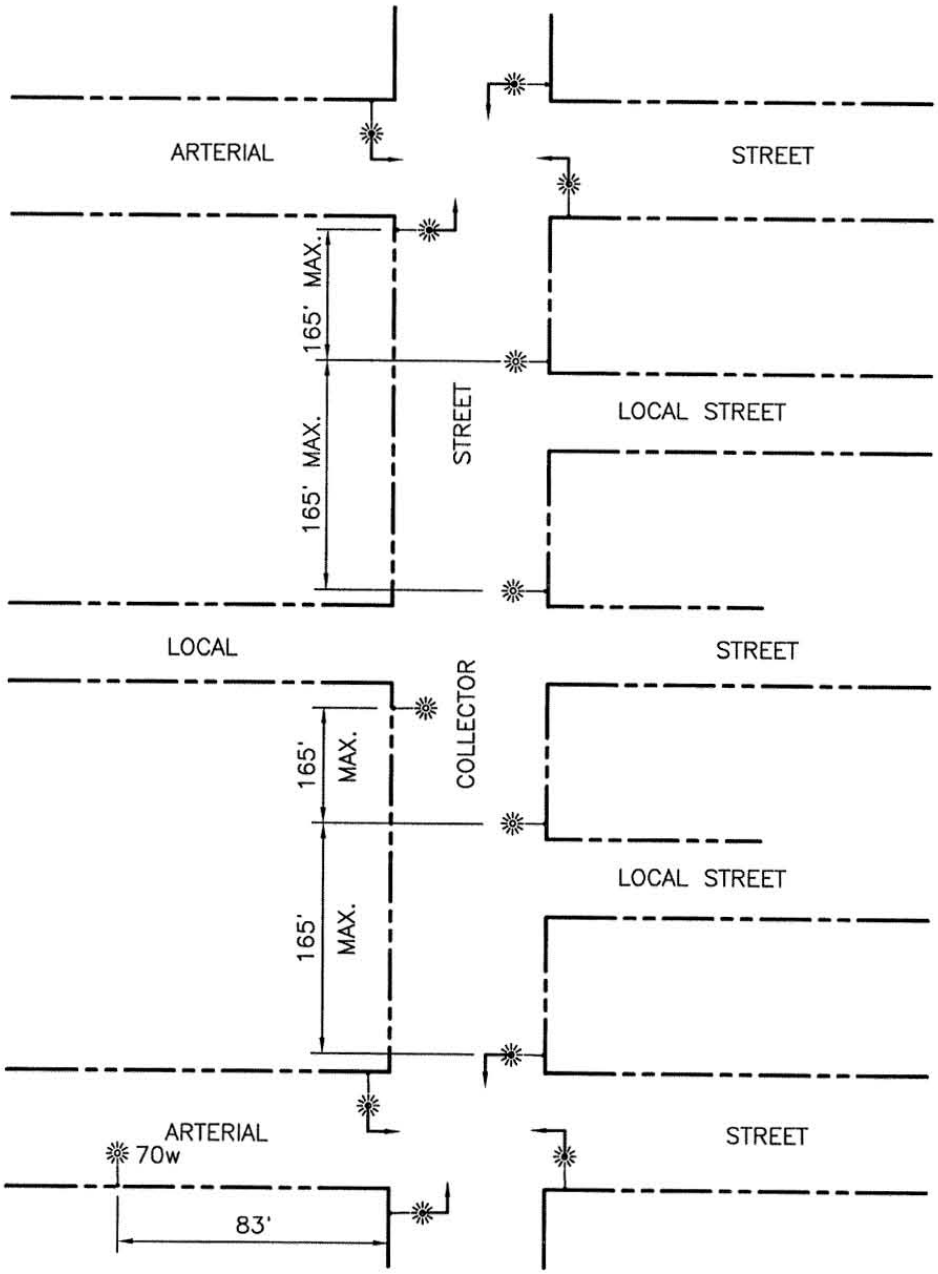

NOTES:

STAGGER OR ALL ON ONE SIDE MAX. SPACING UNIT TO 165ft.
CURB TO CURB ROADWAY WIDTH 50ft. OR LESS.

= DESIGN CONTROL STREET LIGHTS: 150W, EXCEPT AS NOTED.

= DESIGN CONTROL STREET LIGHTS: 150W, WITH TRAFFIC SIGNAL.

STREET LIGHT PLACEMENT COLLECTOR STREETS	Rev.	Date: 10/1/03 City Engineer	STD. NO. M-2C

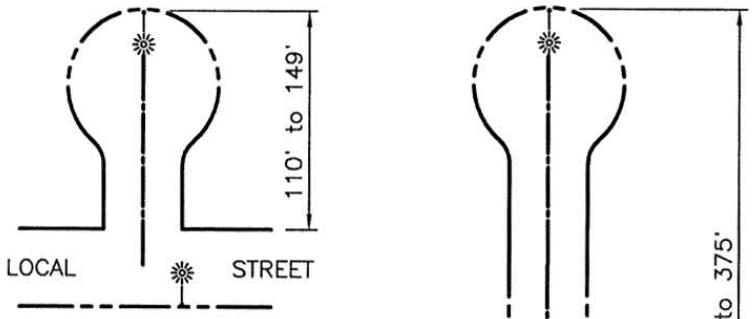

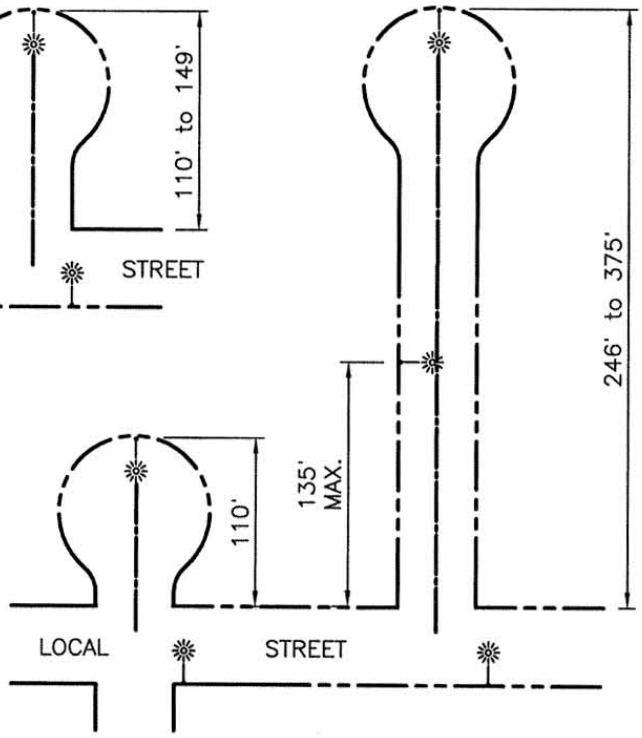

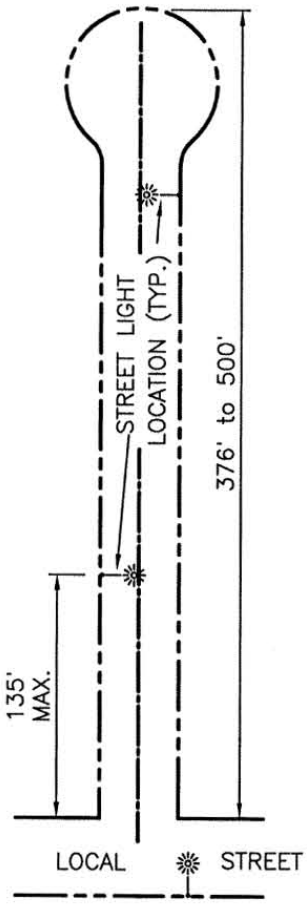

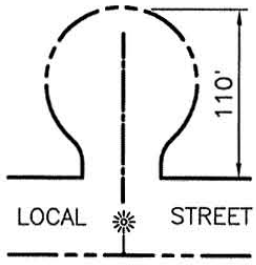

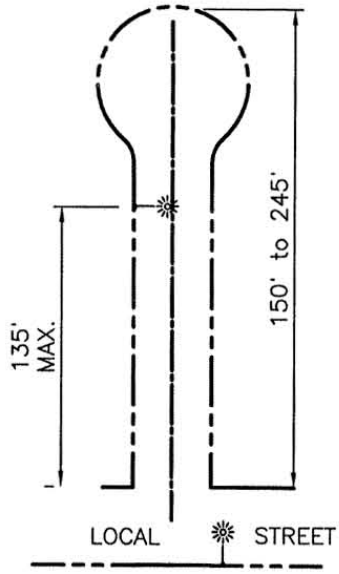

NOTE:
LUMINAIRES SHALL BE 70W HPS AT ALL LOCATIONS

NOTES:
1. STREET LIGHT LOCATIONS SHALL AVOID AREAS AS INDICATED ON STANDARD DETAIL M–2E.
2. STREET LIGHT SHALL BE PLACED ON LOT LINES, WHERE POSSIBLE.

STREET LIGHT PLACEMENT CUL-DE-SAC	Rev.	Date: 10/1/03 Gary A. Tous City Engineer	STD. NO. M-2D

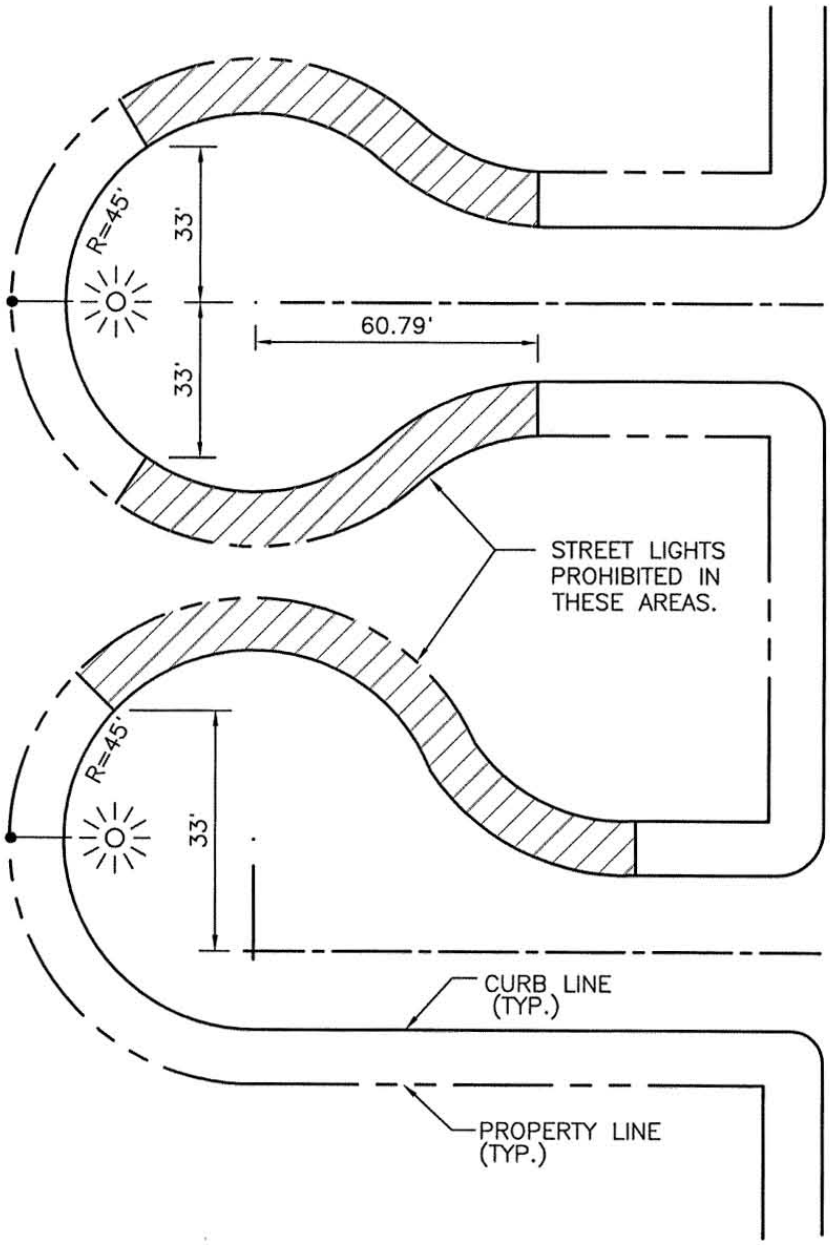

NOTES:

1. STREET LIGHT LOCATION IS DEPENDENT UPON LENGTH OF CUL-DE-SAC. REFER TO STANDARD DETAIL M-2D.

STREET LIGHT PLACEMENT CUL-DE-SAC	Rev.	Date: 10/1/03 Larry A. Tow City Engineer	STD. NO. M-2E

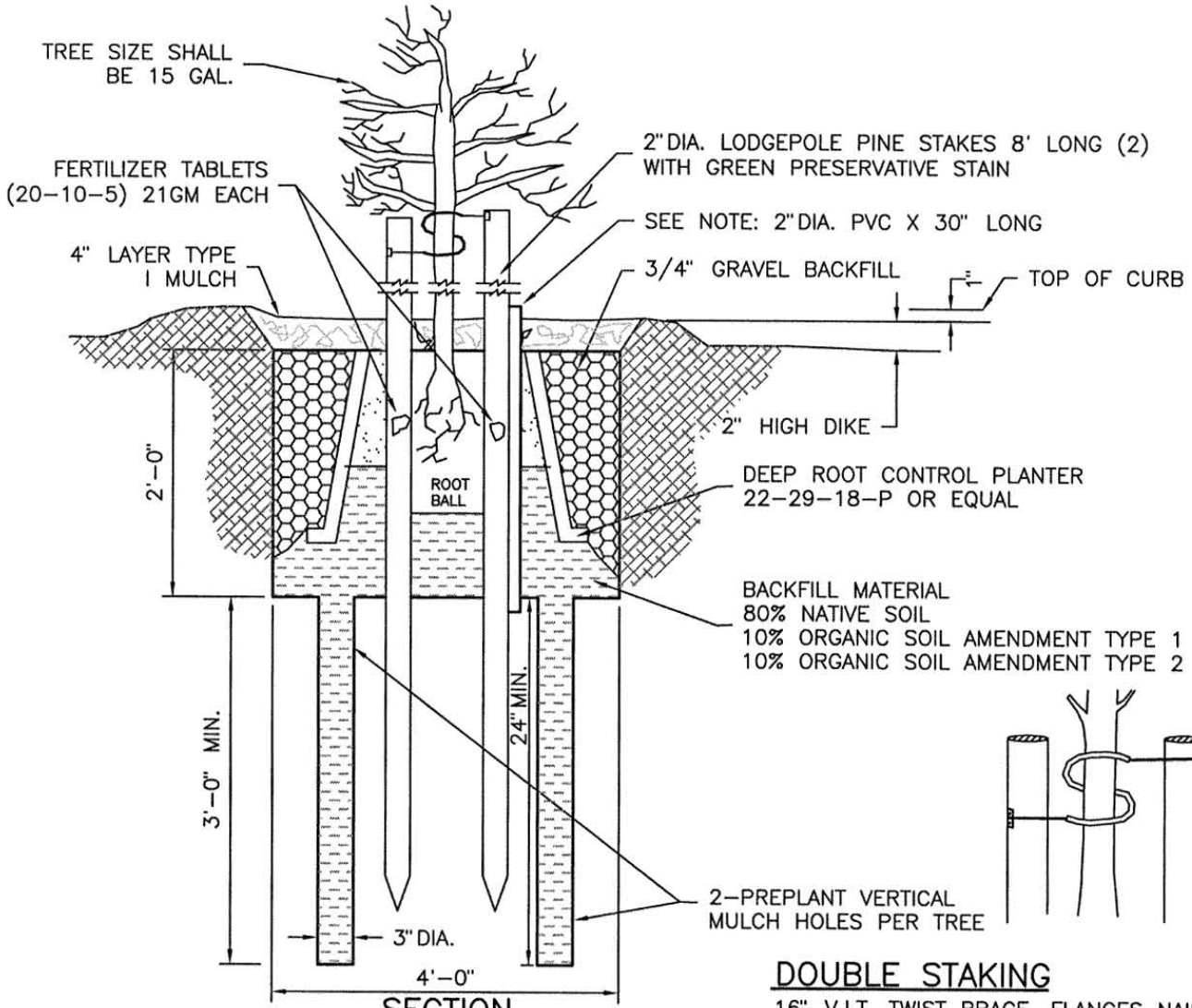

SECTION

N.T.S.

DOUBLE STAKING

16" V.I.T. TWIST BRACE, FLANGES NAILED TO LODGEPOLE PINE STAKES WITH GALVANIZED ROOFING NAILS.

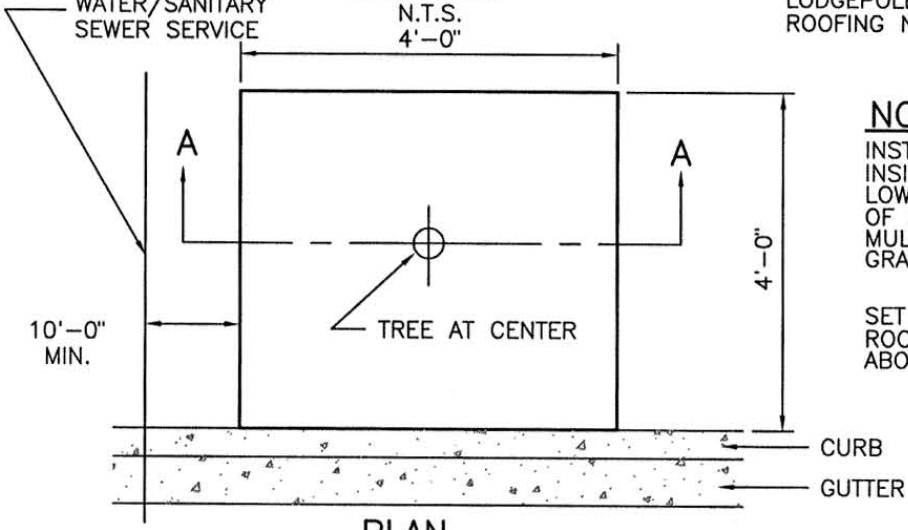

PLAN

N.T.S.

NOTE:

INSTALL 2" DIA. PVC X 30" LONG, INSIDE ROOT SHIELD. PERFORATE LOWER 12" FOR IRRIGATION. TOP OF PIPE SHALL BE 1" ABOVE MULCH. FILL PIPE WITH 3/4" GRAVEL.

SET TREE OR SHRUB WITH TOP OF ROOT BALL APPROXIMATELY 1" ABOVE FINISH GROUND.

STANDARD TREE WELL	Rev.	Date: 10/1/03 City Engineer	STD. NO. M-3

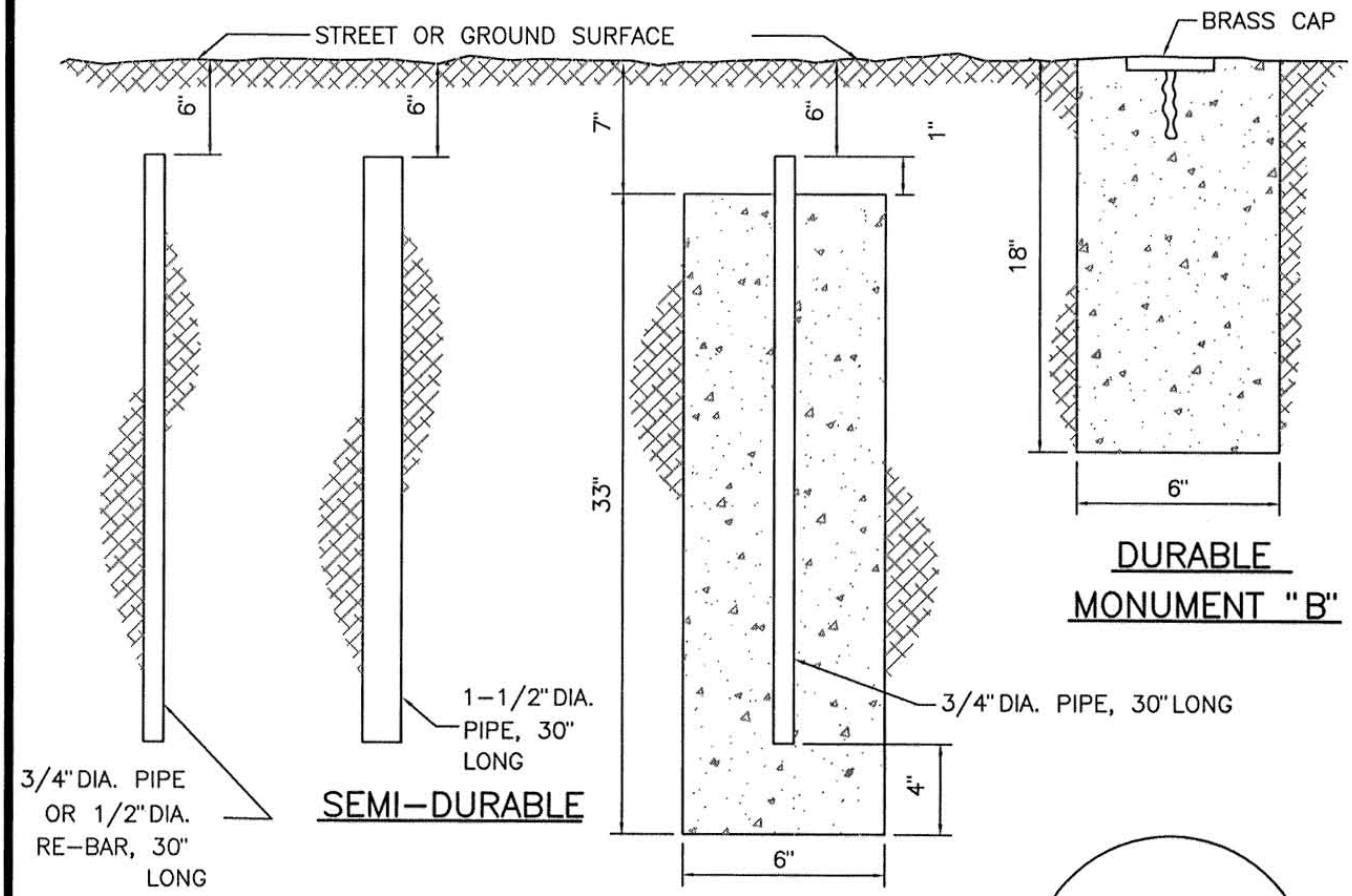

NOTES:

1. STATE LAW REQUIRES ALL CORNERS TO BE TAGGED WITH LAND SURVEYORS OR REGISTERED CIVIL ENGINEERS NUMBER.
2. REGULAR-SHAPED SUBDIVISIONS SHALL HAVE BLOCK CORNERS MARKED WITH SEMI-DURABLE MONUMENTS OR DURABLE MONUMENT "A". IRREGULAR-SHAPED SUBDIVISION SHALL HAVE ALL ANGLE AND CURVE POINTS MARKED WITH SEMI-DURABLE MONUMENTS OR DURABLE MONUMENT "A".
3. ALL INTERSECTIONS, ANGLE, AND CURVE POINTS OF STREET CENTER LINES SHALL BE MARKED WITH DURABLE MONUMENTS "B", AFTER STREET SURFACING IS IN PLACE.
4. CONCRETE FOR DURABLE MONUMENTS SHALL BE CLASS B PER SECTION 7 OF THE STANDARD SPECIFICATIONS.

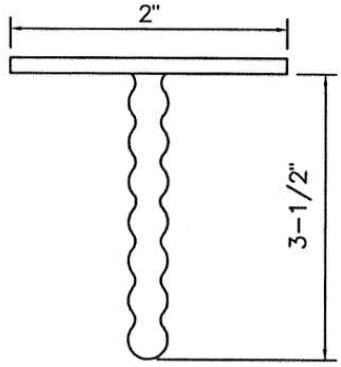

BRASS CAP DETAIL

PROPERTY MONUMENTS	Rev.	Date: 10/1/03 Harry A. Tow City Engineer	STD. NO. M-4

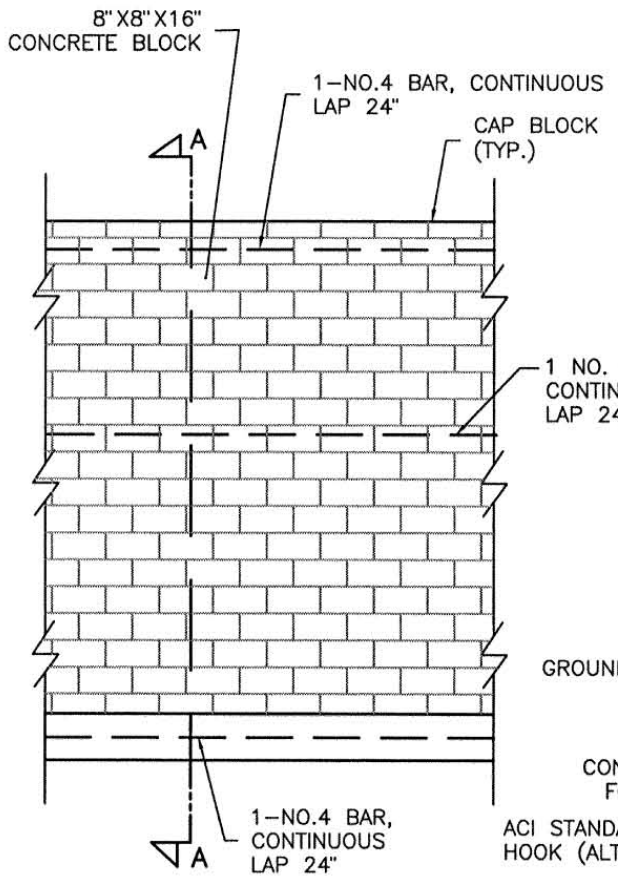

ELEVATION
N.T.S.

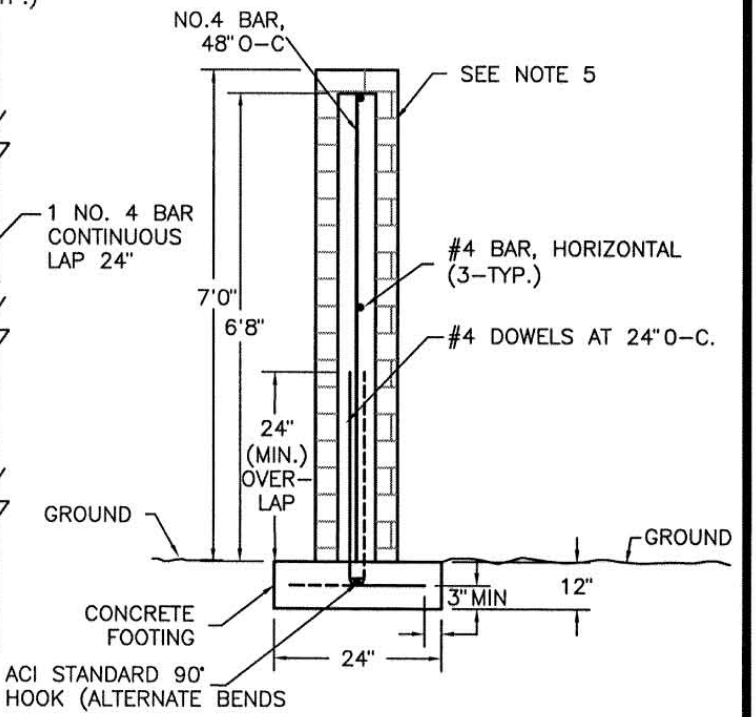

SECTION A–A
N.T.S.

NOTES:

1. COMPLY WITH APPLICABLE SECTIONS OF THE CURRENTLY–ADOPTED U.B.C.
2. IF FENCE IS TO ACT AS A RETAINING WALL, ADDITIONAL CALCULATIONS SHALL BE SUBMITTED BY DEVELOPER'S ENGINEER.
3. HORIZONTAL REINFORCEMENT SHALL BE LADDER OR HORIZONTAL TRUSS TYPE WIRE AND SHALL HAVE A CROSS SECTIONAL AREA 0.061 SQ.IN/FT FOR 8" WALL.
4. GROUT ALL CELLS SOLID USING PORTLAND CEMENT CONCRETE GROUT PER STATE STANDARD SPECIFICATIONS.
5. FOOTING SHALL BE CLASS "B" (2500 PSI) CONCRETE.
6. ALL MASONRY UNITS SHALL BE 1350 PSI MINIMUM.

7'-0" CONCRETE BLOCK FENCE	Rev.	Date: 10/1/03 Gary A. Tom City Engineer	STD. NO. M-5

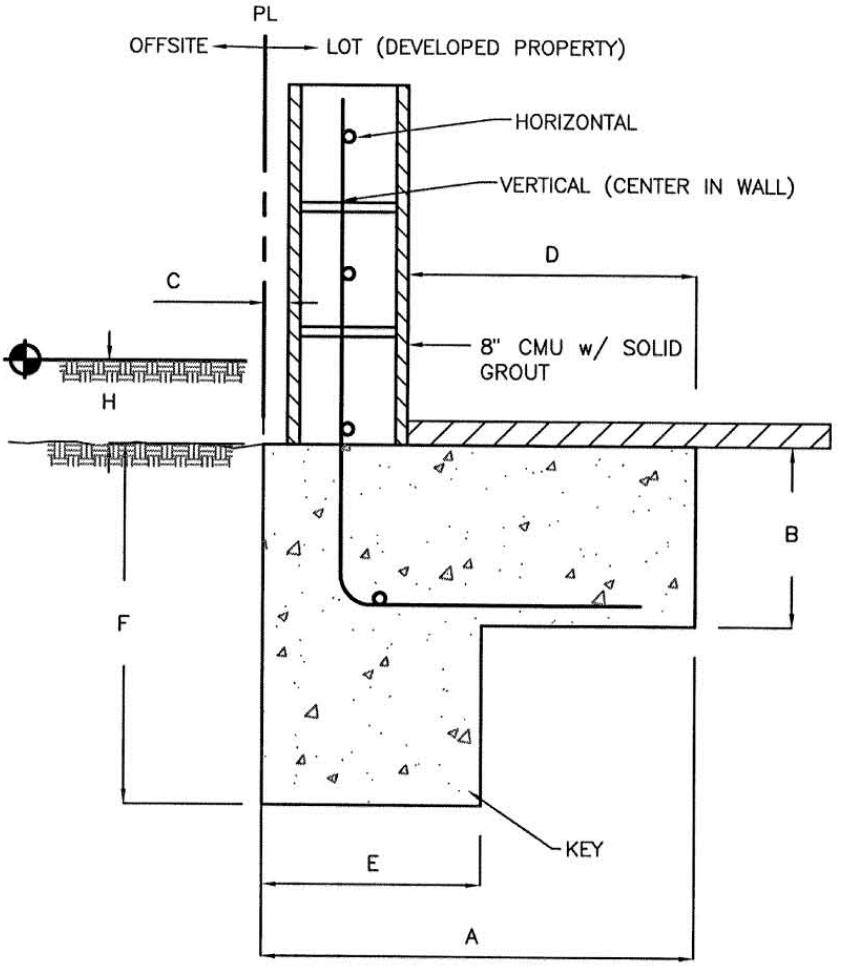

DETAIL A

FOUNDATION SCHEDULE / WALL / KEY

H	A	B	C	WALL VERT.	WALL HORZ.	KEY E	KEY F
0'-8" TO LESS THAN 1'-0"	1'-8"	12"	4"	#4@32	#4@32	NOT REQ'D	NOT REQ'D
1'-0" TO LESS THAN 2'-0"	2'-0"	12"	4"	#4@32	#4@32	8"	20"
2'-0" TO LESS THAN 3'-0"	2'-6"	12"	4"	#4@32	#4@32	8"	22"

NOTE: USE CITY OF LEMOORE STANDARD WOOD RETAINING WALL FOR 'H' LESS THAN 8".

RETAINING WALL DETAIL "A"	Rev.	Date: 10/1/03 Larry A. Tow City Engineer	STD. NO. M-5A

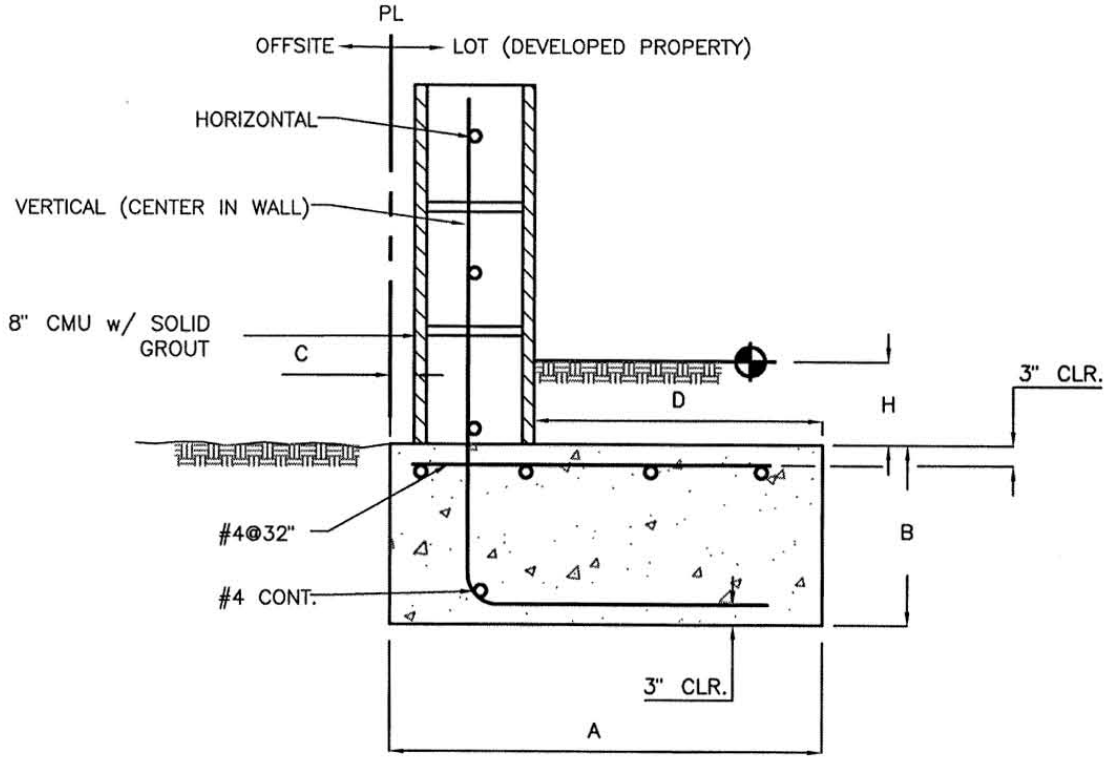

DETAIL B

FOUNDATION SCHEDULE

H	A	B	C
0'-8" TO LESS THAN 1'-0"	1'-4"	12"	4"
1'-0" TO LESS THAN 2'-0"	2'-0"	12"	4"
2'-0" TO LESS THAN 3'-0"	3'-0"	12"	4"

WALL

VERT.	HORZ.
#4@32	#4@32 (MAX.)
#4@32	#4@32 (MAX.)
#4@32	#4@32 (MAX.)

NOTE: USE CITY OF LEMOORE STANDARD WOOD RETAINING WALL FOR 'H' LESS THAN 8".

RETAINING WALL DETAIL "B"	Rev.	Date: 10/1/03 Harry A. Tow City Engineer	STD. NO. M-5B

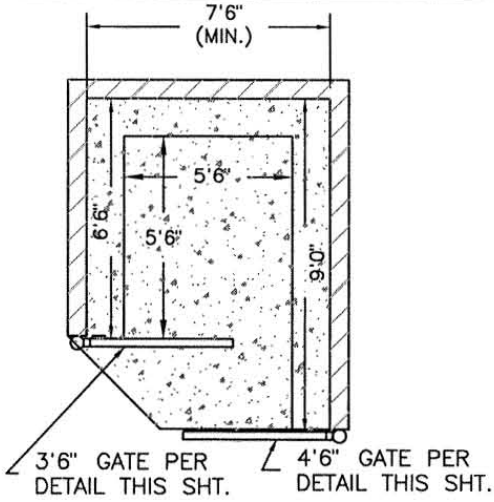

SINGLE DUMPSTER ENCLOSURE
TOP VIEW N.T.S.

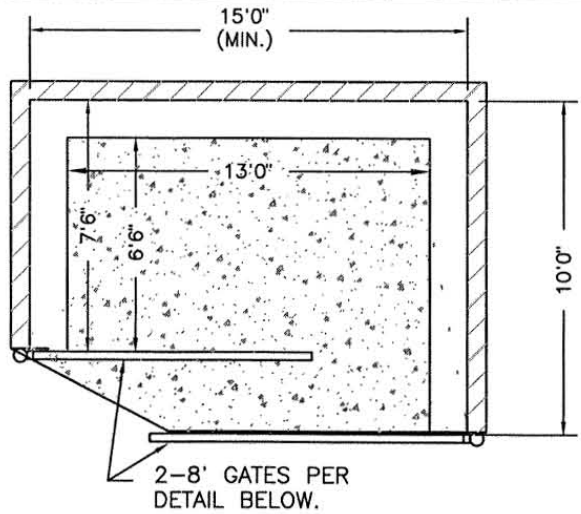

DOUBLE DUMPSTER ENCLOSURE
TOP VIEW N.T.S.

NOTES:

1. 6 FT. HIGH CONCRETE BLOCK WALL SHALL BE CONSTRUCTED PER STD. DWG. NO M-5
2. FLOOR SHALL BE 4" THICK 6 SACK CONCRETE WITH 6X6X10X10 WWM REINFORCEMENT THROUGHOUT.

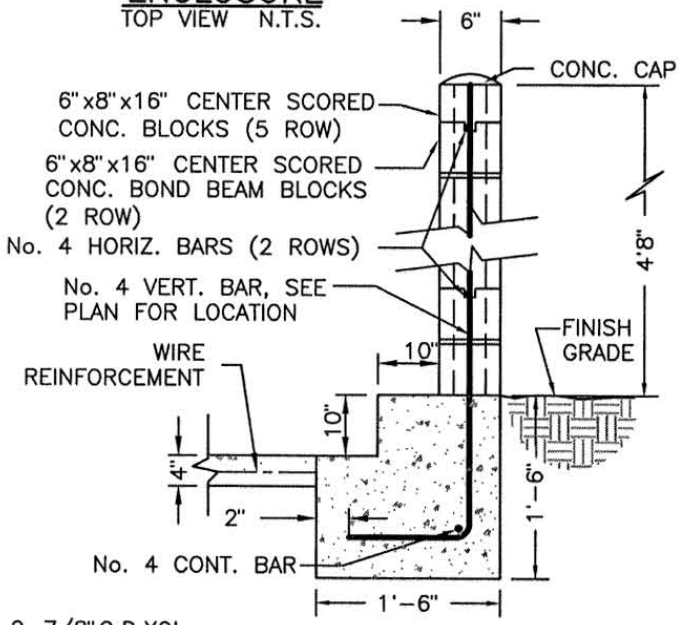

SECTION A
N.T.S.

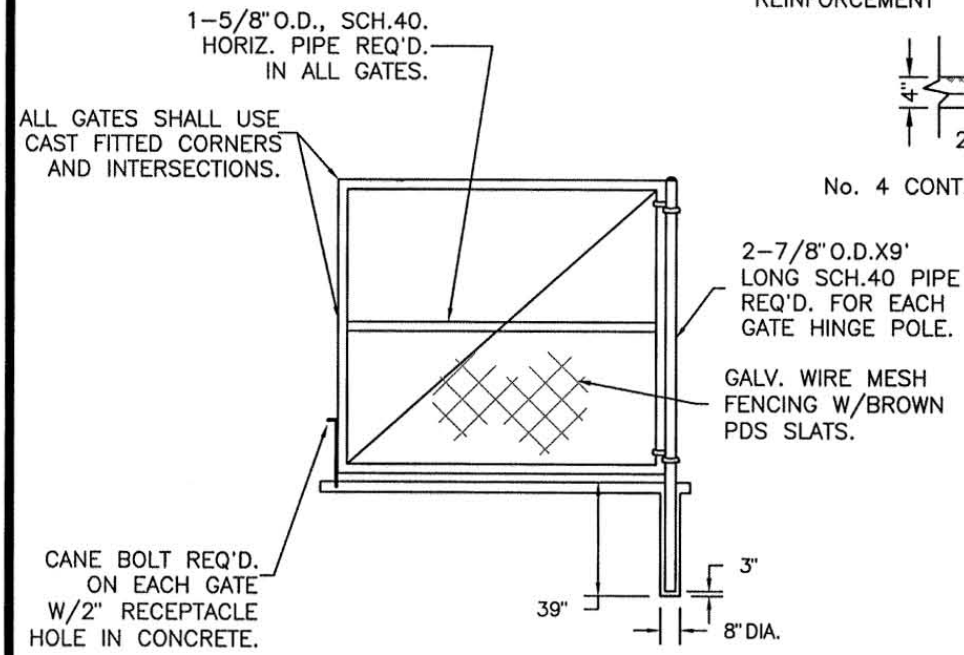

GATE DETAIL
TOP VIEW N.T.S.

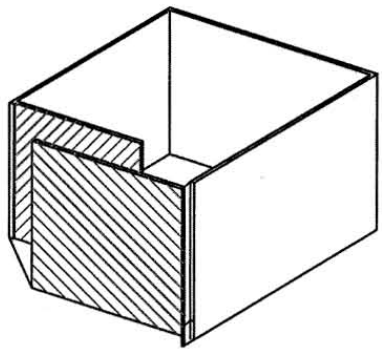

ISOMETRIC VIEW
N.T.S.

TRASH DUMPSTER ENCLOSURE	Rev.	Date: 10/1/03 Harry A. Tow City Engineer	STD. NO. M-6

NOTE:

1. FOR SURFACE REPLACEMENT AND ADJACENT COMPACTION REQUIREMENTS SEE STD. DRAWING M-8, SURFACE REPLACEMENT.

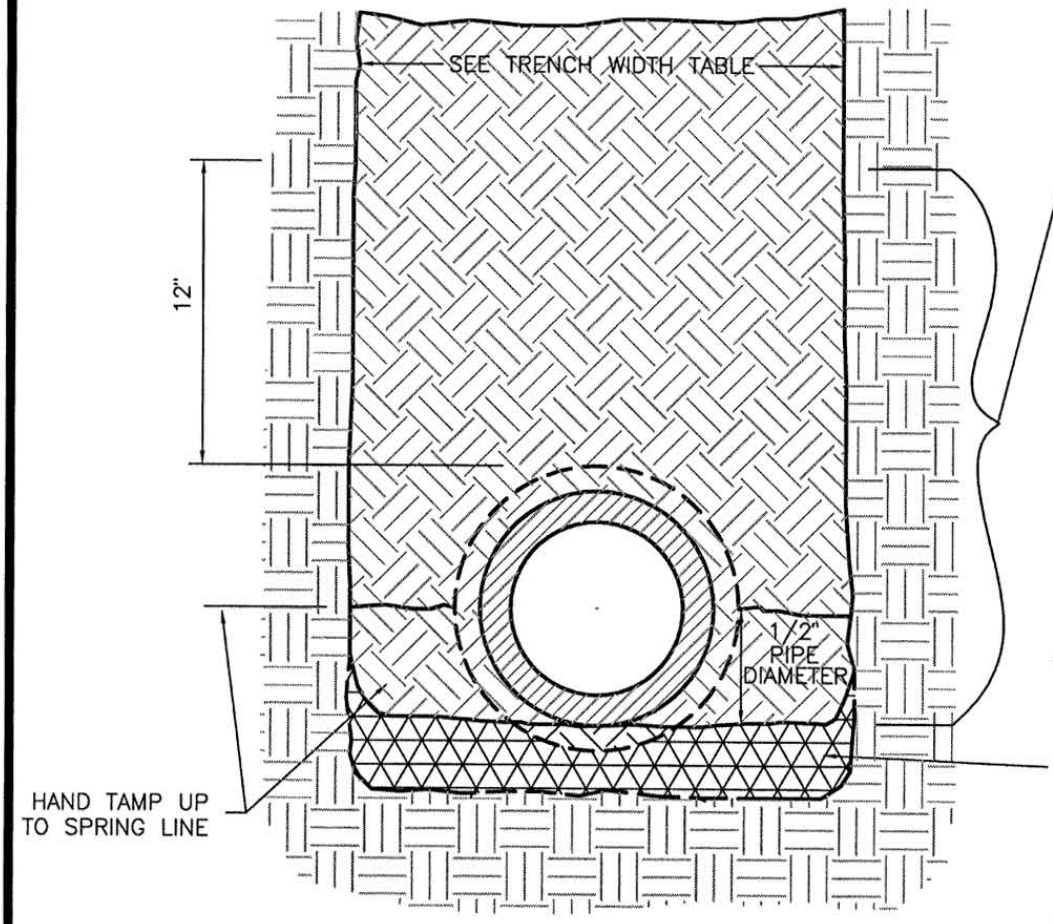

IMPORTED BACKFILL MATERIAL FOR PIPE, FITTINGS, AND ANCHOR WALLS SHALL CONSIST OF CLEAN SAND HAVING A SAND EQUIVALENT VALUE OF NOT LESS THAN 40, AS DETERMINED BY CALIFORNIA TEST METHOD NO. 217. COMPACTION SHALL BE A MINIMUM RELATIVE COMPACTION OF 90%.

A) WHERE HARDPAN IS ENCOUNTERED, TRENCH SHALL BE OVER-EXCAVATED A MIN. OF 4 INCHES, AND SELECT MATERIAL COMPACTED TO 90% RELATIVE COMPACTION SHALL BE PLACED TO GRADE PRIOR TO LAYING PIPE.

B) WHERE WATER OR NON-STABLE TRENCH BOTTOM CONDITIONS ARE ENCOUNTERED, CONTRACTOR SHALL OVER-EXCAVATE AND CONSTRUCT CLASS I BACKFILL IN ACCORDANCE WITH THE STANDARD SPECIFICATIONS.

TRENCH WIDTH TABLE

NORMAL PIPE SIZE	MIN. TRENCH WIDTH	MAX. TRENCH WIDTH
4" THROUGH 12"	O.D. + 12"	O.D. + 18"
14" THROUGH 30"	O.D. + 18"	O.D. + 24"

TRENCH BACKFILL	Rev.	Date: 10/1/03 Larry A. Tow City Engineer	STD. NO. M-7

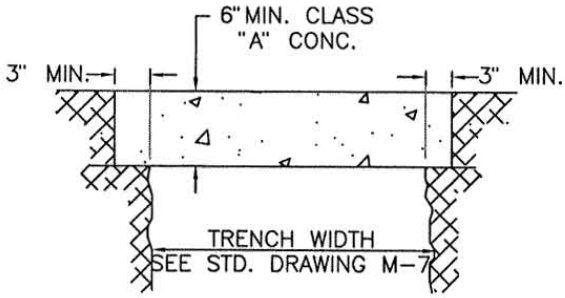

A
EXISTING CONCRETE

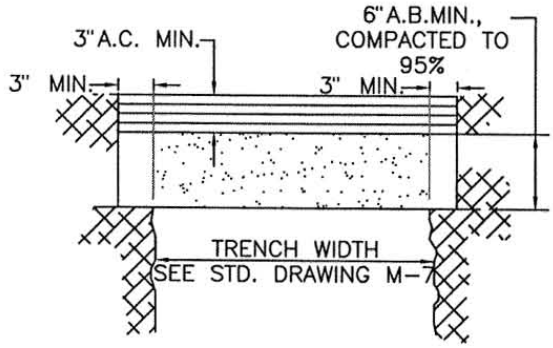

B
EXISTING A.C.

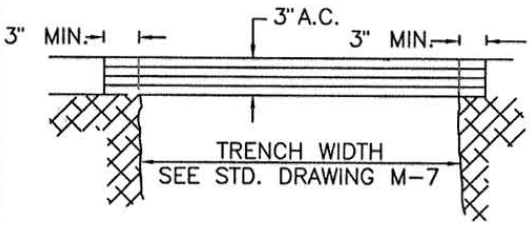

C
EXISTING BITUMINOUS

NOTES:

1. TEMPORARY RESURFACING MAY BE REQUIRED IN ALL STREETS AS DIRECTED BY THE CITY ENGINEER.
2. "A.C." SHALL MEAN TYPE "B" ASPHALT CONCRETE IN ACCORDANCE WITH THE STANDARD SPECIFICATION FOR ASPHALT CONCRETE.
3. "A.B." SHALL MEAN CLASS 2 AGGREGATE BASE IN ACCORDANCE WITH THE STANDARD SPECIFICATIONS.
4. PAVEMENT SECTIONS SHOWN ABOVE ARE MINIMUMS. IF THE EXISTING STRUCTURAL SECTION IS GREATER, THICKNESS OF TRENCH RESURFACING SHALL MATCH EXISTING.
5. BACKFILL SHALL BE COMPACTED TO 90% RELATIVE COMPACTION TO A DEPTH OF 1 FOOT ABOVE PIPE.

SURFACE REPLACEMENT	Rev.	Date: 10/1/03 City Engineer	STD. NO. M-8

SUGGESTED UTILITY LOCATIONS

NOTE: ILLUSTRATION APPLIES WHEN LOOKING NORTH OR EAST

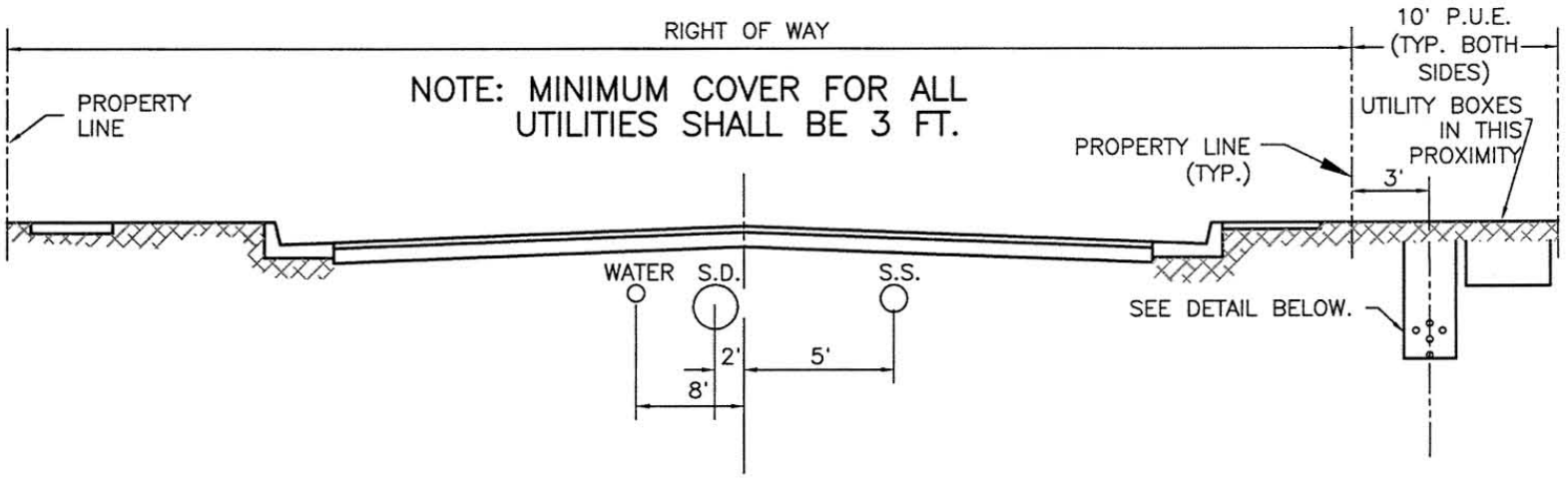

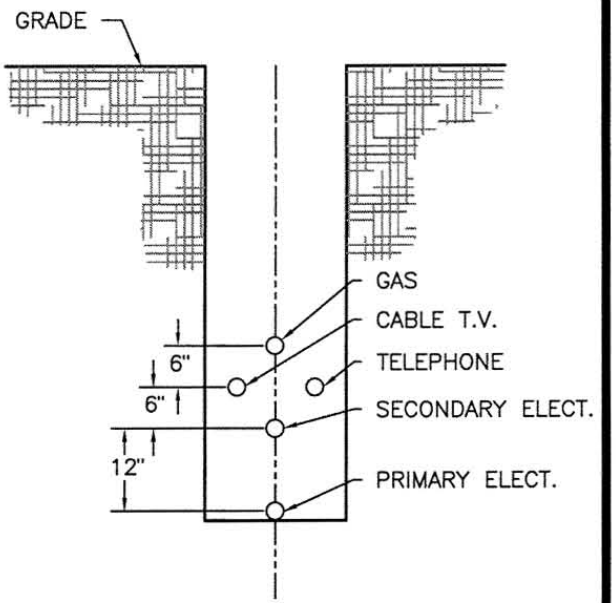

NOTES:

1. UTILITY COMPANY SHALL OBTAIN AN EXCAVATION PERMIT PRIOR TO STARTING WORK.
2. MAIN LINES, SERVICE LATERALS, VAULTS, MANHOLES AND VALVES SHALL BE INSTALLED PRIOR TO STREET PAVING AND SIDEWALK INSTALLATION.
3. SERVICE LATERALS SHALL BE INSTALLED TO THE SAME ELEVATION AS MAIN LINE.
4. TRENCH BACKFILL SHALL BE PER STD. DWG. NO. M-7 & M-8.
5. SANITARY SEWER LATERALS SHALL BE LOCATED PRIOR TO EXCAVATING.
6. ALL NECESSARY TESTS SHALL BE PAID FOR BY THE PERMITTEE.

Rev.

Date: 10/1/03

City Engineer

STD. NO. M-9

EXAMPLE A:

WALL OUTSIDE OF VISIBILITY TRIANGLE SHALL BE THE HEIGHT SPECIFIED IN THE CONDITIONS OF APPROVAL.

EXAMPLE B:

WALL OUTSIDE OF VISIBILITY TRIANGLE SHALL BE THE HEIGHT SPECIFIED IN THE CONDITIONS OF APPROVAL. WALL WITHIN VISIBILITY TRIANGLE SHALL BE 3' HIGH OR LESS.

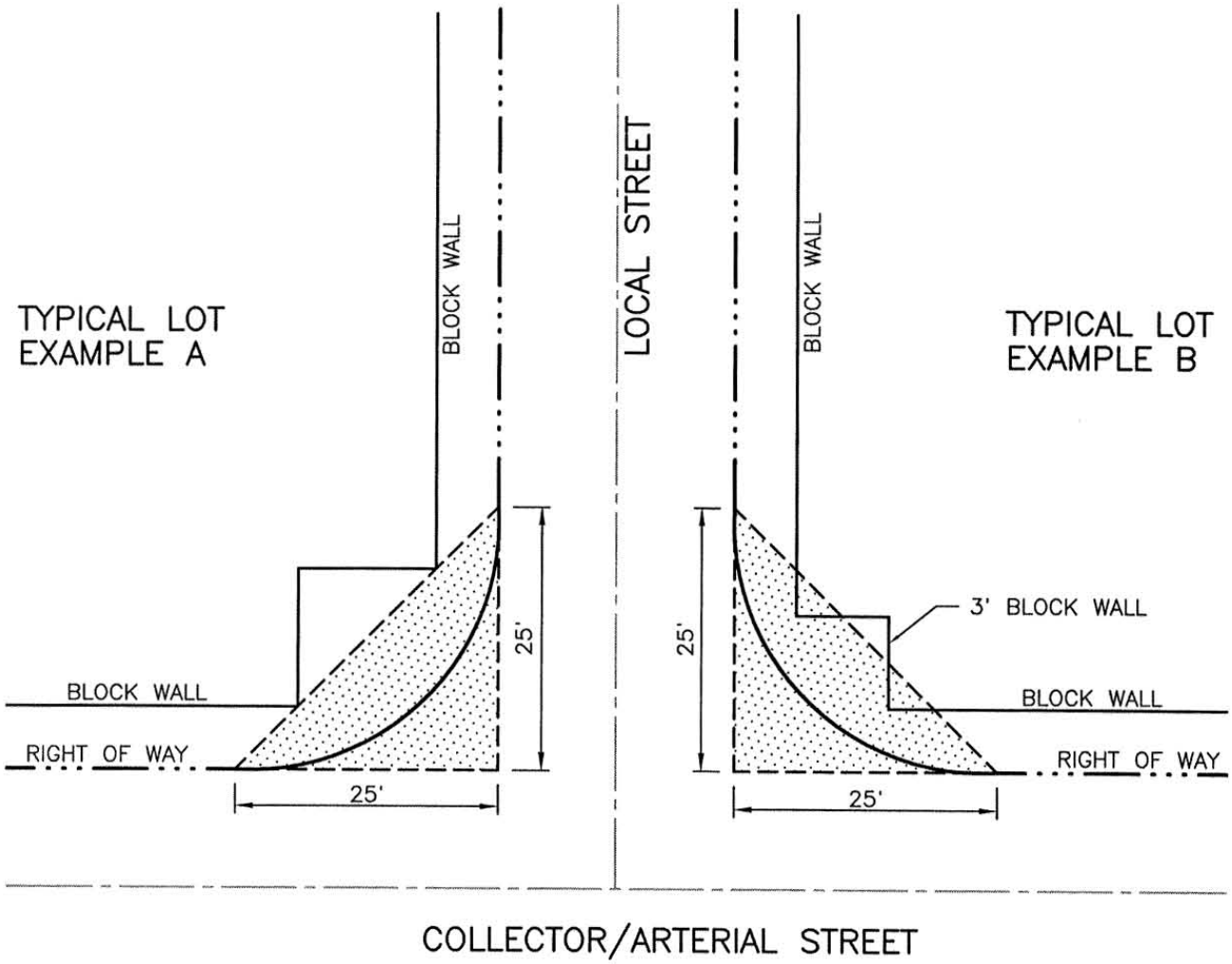

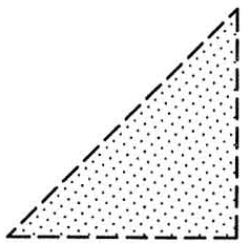

VISIBILITY TRIANGLE

NOT TO SCALE

VISIBILITY TRIANGLE	Rev.	Date: 10/1/03 Gary A. Tow City Engineer	STD. NO. M-10

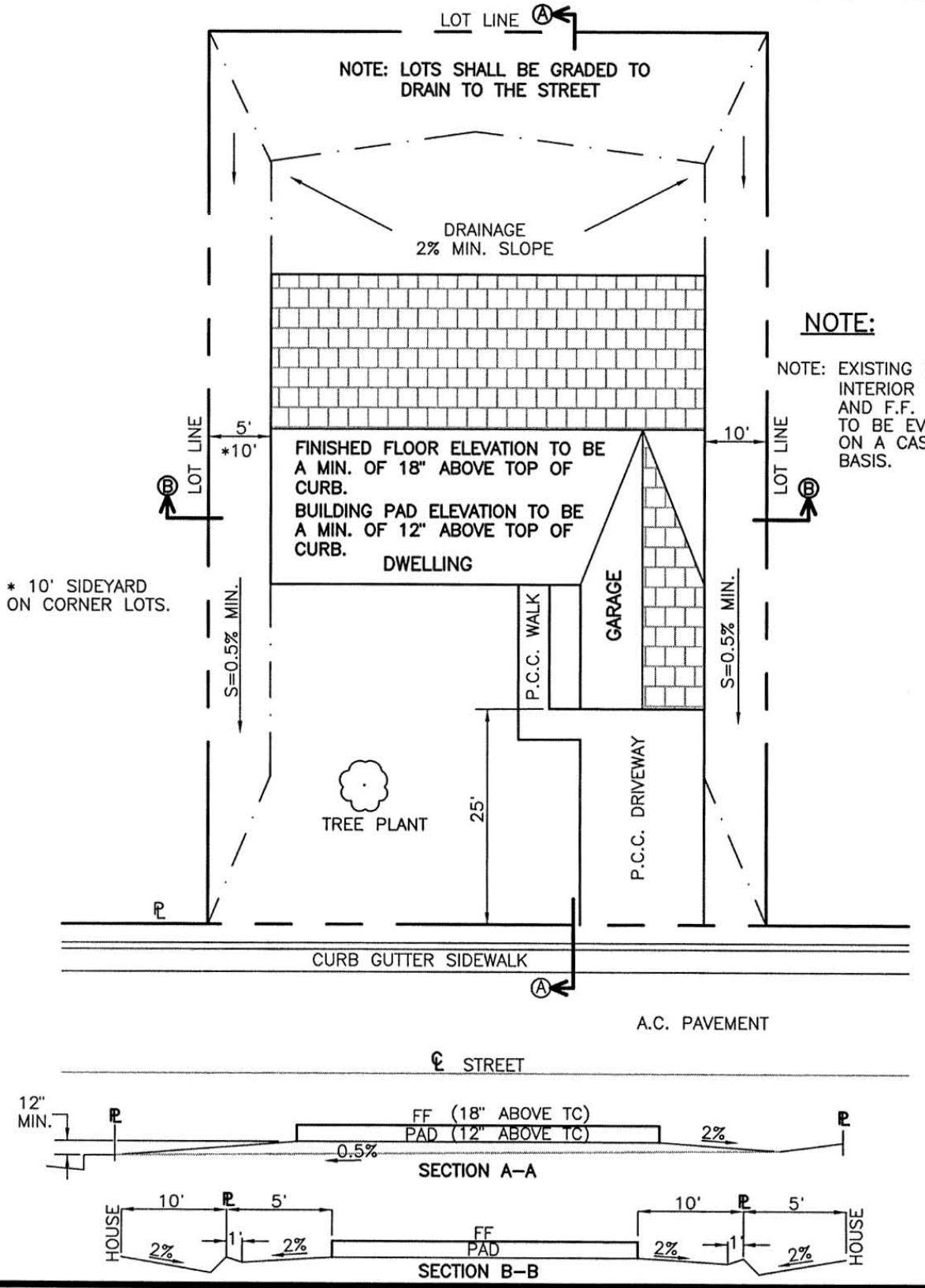

NOTE:

NOTE: EXISTING DEVELOPED INTERIOR LOT PADS AND F.F. ELEVATIONS TO BE EVALUATED ON A CASE BY CASE BASIS.

TYPICAL LOT DRAINAGE	Rev.	Date: 10/1/03 Harry A. Tow City Engineer	STD. NO. M-11

POSTS TOPS, EXTENSION ARMS, STRETCHER BARS AND OTHER REQUIRED FITTINGS AND HARDWARE SHALL BE STEEL OR MALLEABLE IRON OR WROUGHT IRON AND SHALL BE GALVANIZED.

WIRE USED IN THE MANUFACTURING OF THE FABRIC SHALL BE NO. 11 ASW-GAUGE COPPER STEEL WIRE FOR ALL FENCE 72" OR LESS IN HEIGHT, AND SHALL BE WOVEN INTO APPROXIMATELY 1-1/2" INCH MESH.

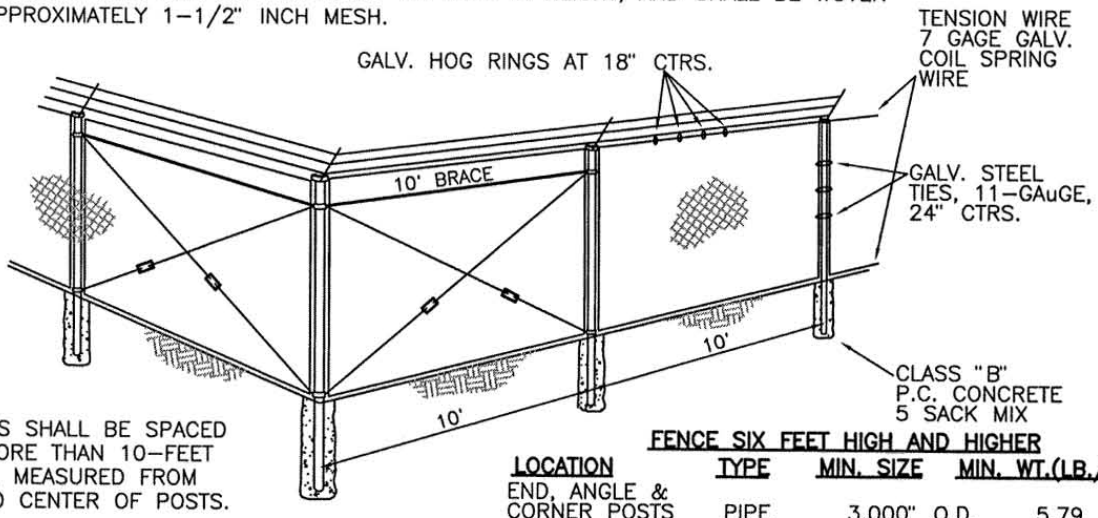

LINE POSTS SHALL BE SPACED AT NOT MORE THAN 10-FEET INTERVALS, MEASURED FROM CENTER TO CENTER OF POSTS.

END, CORNER, AND GATE POSTS SHALL BE BRACED TO THE NEAREST LINE POST WITH GALVANIZED DIAGONAL OR HORIZONTAL BRACES USED AS COMPRESSION MEMBERS AND GALVANIZED 3/8" STEEL TRUSS RODS WITH TURNBUCKLES USED AS TENSION MEMBERS.

FENCE SIX FEET HIGH AND HIGHER

LOCATION	TYPE	MIN. SIZE	MIN. WT.(LB./FT.)
END, ANGLE & CORNER POSTS	PIPE	3.000" O.D.	5.79
LINE POSTS	PIPE	2.300" O.D.	3.10
	H-SECTION	2.250"	3.90
BRACES	PIPE	1.625" O.D.	2.27
GATE POSTS	PIPE	4.000"	9.10

FENCES LESS THAN SIX FEET HIGH

LOCATION	TYPE	MIN. SIZE	MIN. WT.(LB./FT.)
END, ANGLE & CORNER POSTS	PIPE	2.500" O.D.	3.65
LINE POSTS	PIPE	2.000" O.D.	2.72
	H-SECTION	2.000"	2.80
BRACES	PIPE	1.625" O.D.	2.27
GATE POSTS	PIPE	3.000" O.D.	5.79

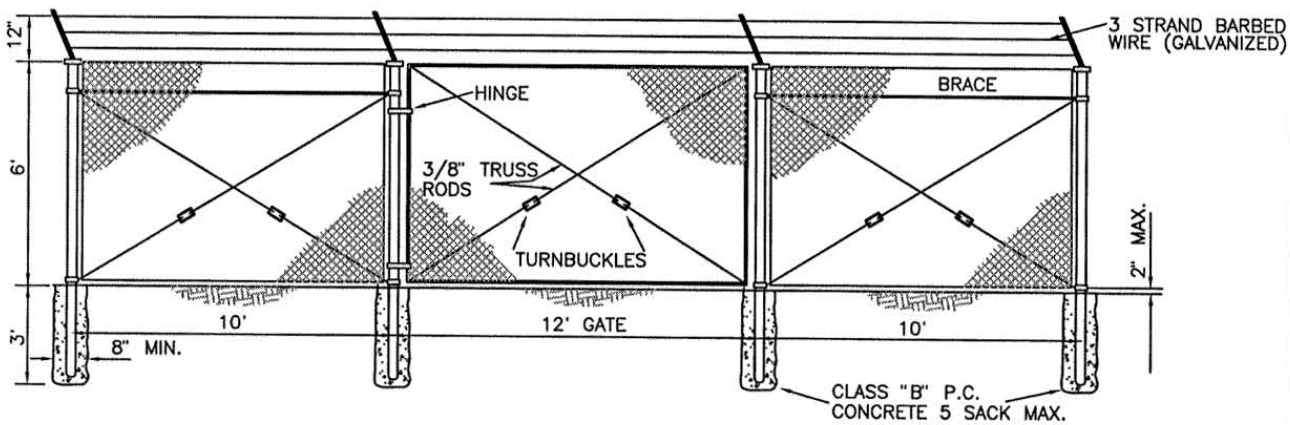

GATE FRAME SHALL BE CONSTRUCTED OF NOT LESS THAN 1.86" DIA. GALVANIZED PIPE AND SHALL BE CROSS TRUSSED WITH 3/8" ADJUSTABLE TRUSS RODS. THE CORNER OF GATE FRAMES SHALL BE FASTENED TOGETHER WITH A MALLEABLE IRON FITTING OR WELDED & GALVANIZE COATED OVER WELDS.

THE GATE SHALL BE HUNG BY AT LEAST TWO (2) STEEL OR MALLEABLE IRON HINGES NOT LESS THAN THREE INCHES (3") IN WIDTH, AND A MALLEABLE CATCH AND LOCKING ATTACHMENT.

ALL POSTS SHALL BE A MINIMUM OF 9' LONG.

FILE: 0-0.dwg

CHAIN LINK FENCING AND GATE	Rev.	Date: 10/1/03 Harry A. Tow City Engineer	STD. NO. M-12

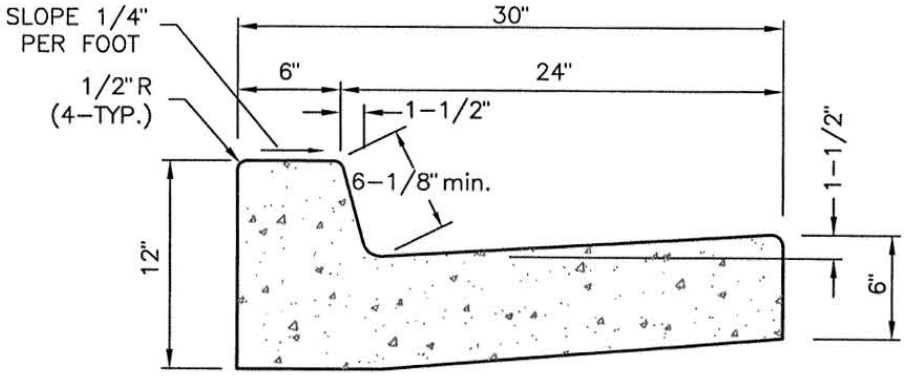

CURB & GUTTER DETAIL

N.T.S.

NOTES:

1. CONCRETE SHALL BE CLASS "B", 2500 PSI, IN ACCORDANCE WITH THE STANDARD SPECIFICATIONS FOR CONCRETE CURB AND GUTTER.
2. CURB AND GUTTER SHALL BE PLACED TO THE GRADES SHOWN ON THE PLANS, AND SHALL NOT VARY MORE THAN THE TOLERANCE STATED IN THE STANDARD SPECIFICATIONS FOR PORTLAND CEMENT CONCRETE IMPROVEMENTS.
3. CURB SHALL BE GIVEN A LIGHT BROOM FINISH. GUTTER PAN SHALL BE GIVEN A ROUGH BROOM FINISH.
4. FINISHED EDGE OF ASPHALT PAVEMENT SHALL BE FLUSHED WITH OR UP 1/4" ABOVE LIP OF GUTTER.

CURB AND GUTTER	Rev.	Date: 10/1/03 Larry A. Tow City Engineer	STD. NO. P-1

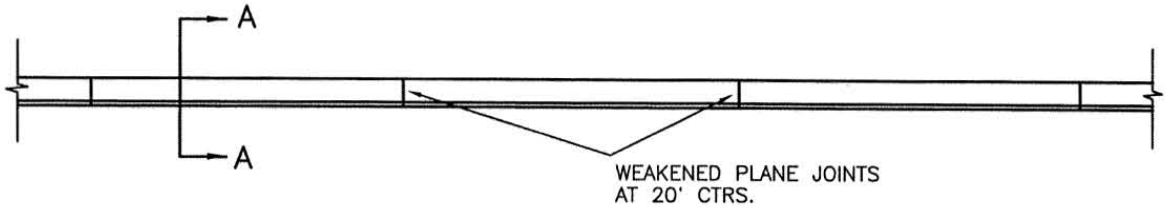

PLAN

* MEDIAN CURBS SHALL HAVE 4" TOTAL BATTER.

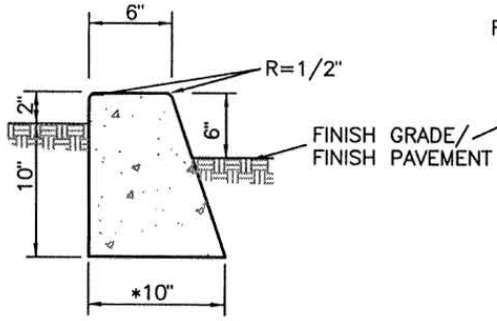

SECTION A–A
LANDSCAPE CURB

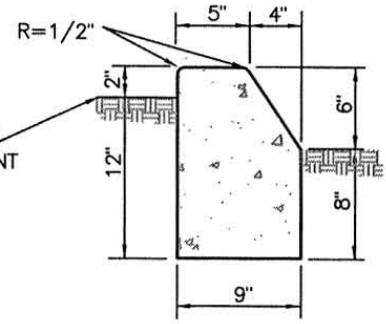

STATE STANDARD B–1
MEDIAN CURB

NOTES
1. ALL CONCRETE WORK SHALL BE OF CLASS "B" CONC. (5 SACK MIX.) 2500 P.S.I.

2. ALL CONCRETE SHALL HAVE A LIGHT BROOM FINISH.

3. WEAKENED PLANE JOINTS SHALL BE CONSTRUCTED AT 20' CTRS. AND SHALL BE A MIN. DEPTH OF 1" AND SHALL BE FINISHED WITH A SCORING TOOL LEAVING THE EDGES ROUNDED.

MEDIAN & LANDSCAPE CURB	Rev.	Date: 10/1/03 Harry A. Tow City Engineer	STD. NO. P-1A

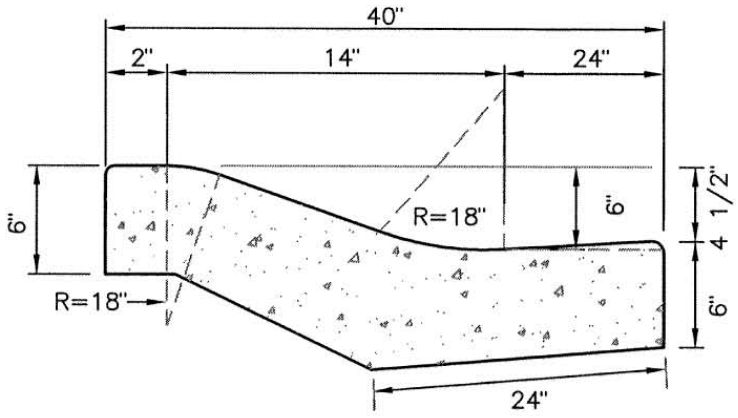

ROLLED CURB & GUTTER DETAIL

N.T.S.

NOTES:

1. CONCRETE SHALL BE CLASS "B", 2500 PSI, IN ACCORDANCE WITH THE STANDARD SPECIFICATIONS FOR CONCRETE CURB AND GUTTER.
2. CURB AND GUTTER SHALL BE PLACED TO THE GRADES SHOWN ON THE PLANS, AND SHALL NOT VARY MORE THAN THE TOLERANCE STATED IN THE STANDARD SPECIFICATIONS FOR PORTLAND CEMENT CONCRETE IMPROVEMENTS.
3. CURB SHALL BE GIVEN A LIGHT BROOM FINISH. GUTTER PAN SHALL BE GIVEN A ROUGH BROOM FINISH.
4. FINISHED EDGE OF ASPHALT PAVEMENT SHALL BE FLUSHED WITH OR UP 1/4" ABOVE LIP OF GUTTER.
5. MINIMUM GRADIENT OF 0.15 FEET PER 100 FEET.

ROLLED CURB AND GUTTER	Rev.	Date: 10/1/03 City Engineer	STD. NO. P-1B

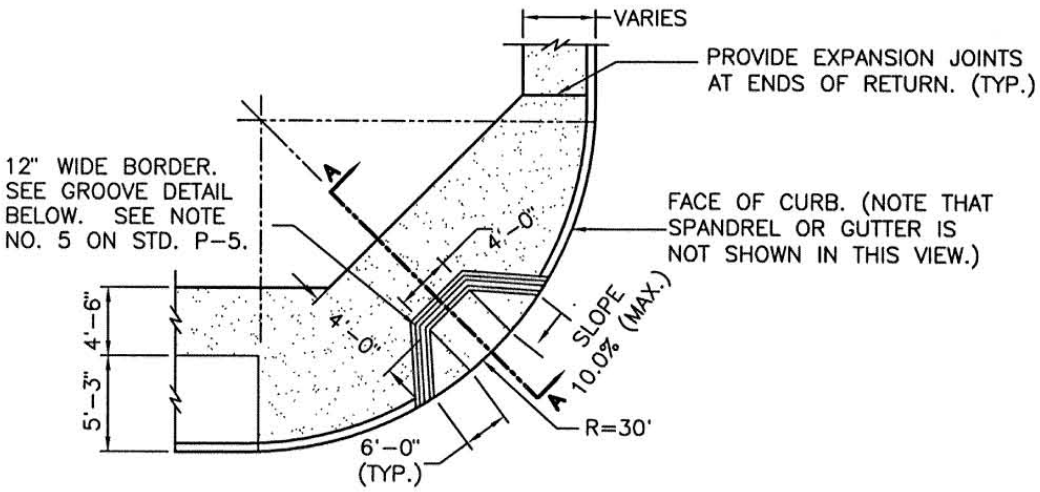

PLAN VIEW
N.T.S.

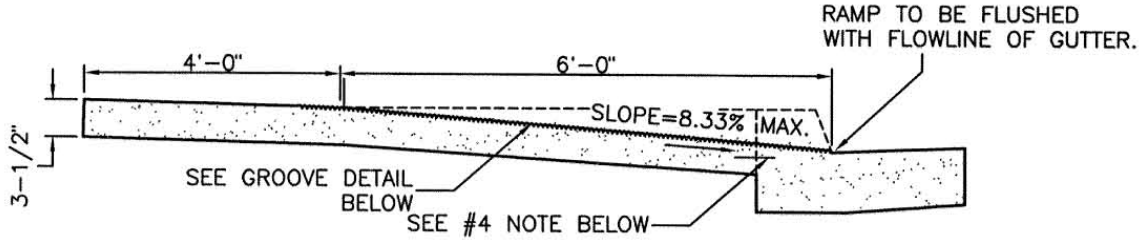

SECTION A-A
N.T.S.

NOTES:

1. CONCRETE SHALL BE CLASS "B" IN ACCORDANCE WITH SECTION 7 OF THE STANDARD SPECIFICATIONS.
2. A GUTTER IS REQUIRED. REFER TO PLANS AND STD. DWG. NO. P-1 FOR CONSTRUCTION SPECIFICATIONS.
3. EXPANSION JOINTS ARE REQUIRED AT THE ENDS OF ALL CURB RETURNS.

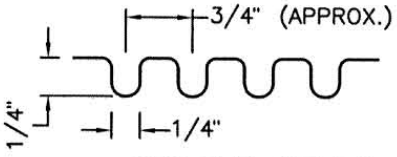

GROOVE DETAIL
N.T.S.

4. IN LIEU OF A CONTIGUOUS CURB/SIDEWALK SECTION, THE CONTRACTOR MAY USE DOWELS. DOWELS SHALL BE #3 SMOOTH BARS, 12" LONG, SET 4" INTO THE CURB AND 8" INTO THE SIDEWALK AT 48"C-C. AREA ALONG CURB, EXTENDING 2 FEET UNDER THE SIDEWALK, SHALL BE TREATED WITH SOIL STERILANT TO PREVENT WEED GROWTH BETWEEN CURB AND SIDEWALK.

WHEELCHAIR RAMP	Rev.	Date: 10/1/03 City Engineer	STD. NO. P-2

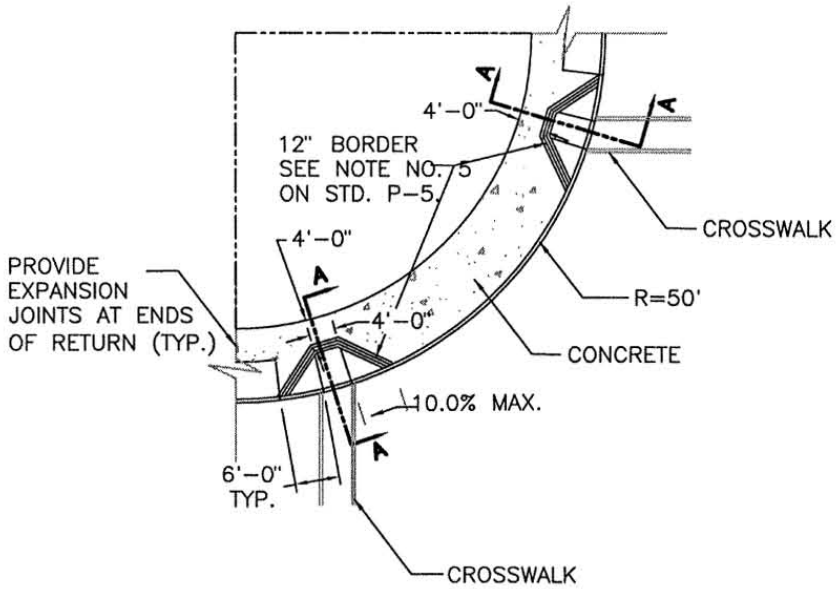

PLAN VIEW
N.T.S.

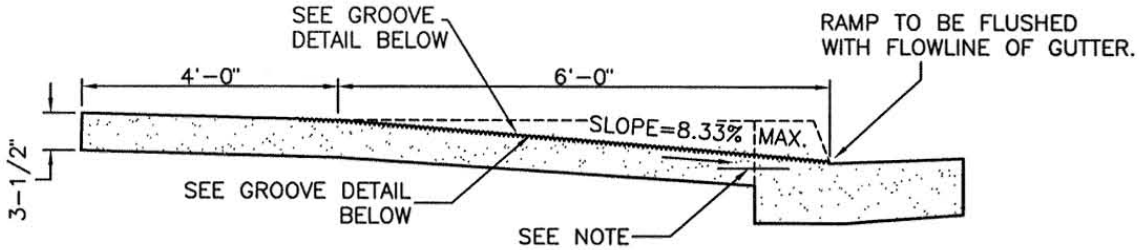

SECTION A-A
N.T.S.

NOTES:

1. CONCRETE SHALL BE CLASS "B" IN ACCORDANCE WITH SECTION 7 OF THE STANDARD SPECIFICATIONS.
2. A GUTTER IS REQUIRED. REFER TO PLANS AND STD. DWG. NO. P-1 FOR CONSTRUCTION SPECIFICATIONS.
3. EXPANSION JOINTS ARE REQUIRED AT THE ENDS OF ALL CURB RETURNS.

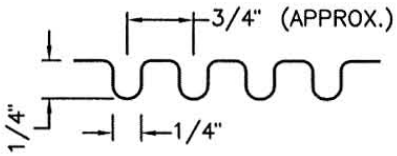

GROOVE DETAIL
N.T.S.

NOTE:

IN LIEU OF A CONTIGUOUS CURB/SIDEWALK SECTION, THE CONTRACTOR MAY USE DOWELS. DOWELS SHALL BE #3 SMOOTH BARS, 12" LONG, SET 4" INTO THE CURB AND 8" INTO THE SIDEWALK AT 48"C-C. AREA ALONG CURB, EXTENDING 2 FEET UNDER THE SIDEWALK, SHALL BE TREATED WITH SOIL STERILANT TO PREVENT WEED GROWTH BETWEEN CURB AND SIDEWALK.

ALTERNATE WHEELCHAIR RAMP	Rev.	Date: 10/1/03 Larry A. Tow City Engineer	STD. NO. P-2A

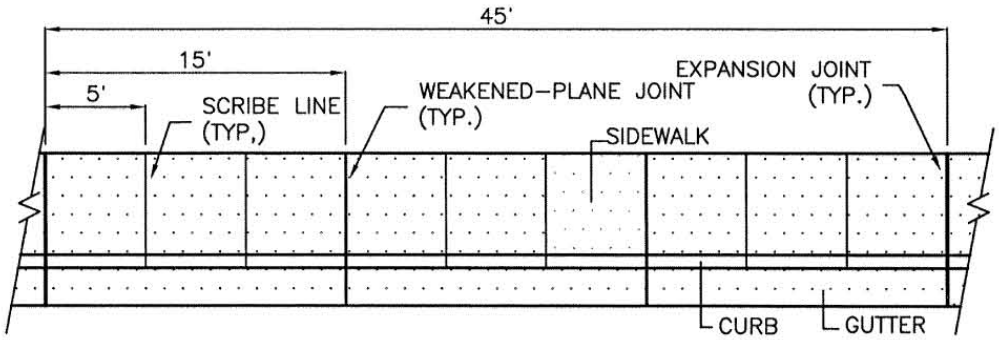

CURB, GUTTER & SIDEWALK SCRIBE LINE DETAIL

N.T.S.

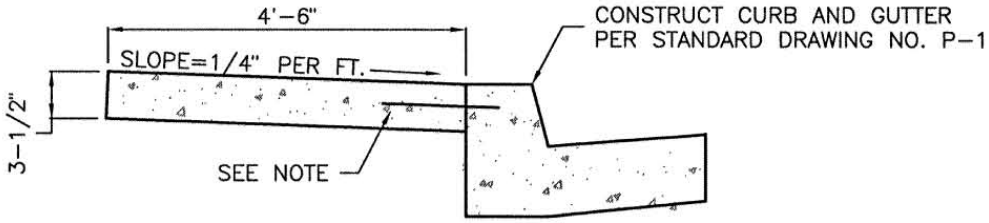

NOTE:

IN LIEU OF A CONTIGUOUS CURB/SIDEWALK SECTION, THE CONTRACTOR MAY USE DOWELS. DOWELS SHALL BE #3 SMOOTH BARS, 12" LONG, SET 4" INTO THE CURB AND 8" INTO THE SIDEWALK AT 48"C-C. AREA ALONG CURB, EXTENDING 2 FEET UNDER THE SIDEWALK, SHALL BE TREATED WITH SOIL STERILANT TO PREVENT WEED GROWTH BETWEEN CURB AND SIDEWALK.

CONTIGUOUS CURB, GUTTER AND SIDEWALK

N.T.S.

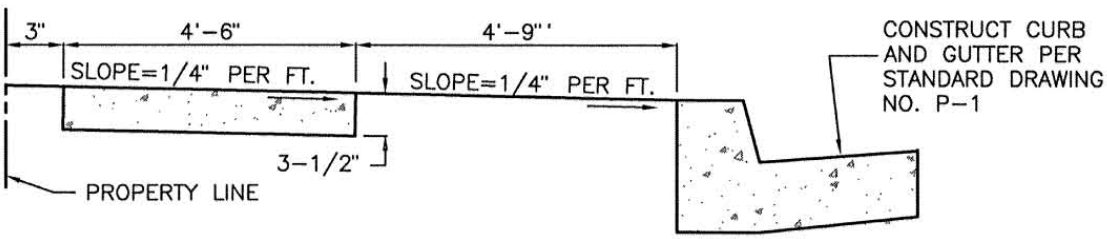

NON-CONTIGUOUS SIDEWALK PATTERN

N.T.S.

NOTES:

1. WHERE EXPANSIVE SOILS ARE ENCOUNTERED, AS SET FORTH IN THE STANDARD SPECIFICATIONS, 6" OF IMPORTED SAND, COMPACTED TO 90% RELATIVE COMPACTION, SHALL BE PLACED UNDER THE CURB, GUTTER AND SIDEWALK.
2. IN THE AREA BETWEEN THE NEW CURB AND GUTTER AND THE EXISTING STREET SURFACE PROVIDE A MINIMUM OF 24" TRANSITION PAVING AT A MINIMUM OF 2" A.C. OVER 6" A.B. OR MATCH EXISTING STREET SECTION.
3. THE AREA BETWEEN CURB AND SIDEWALK SHALL BE FILLED TO 0.10' BELOW TOP OF SURROUNDING CONCRETE WITH CLEAN TOP SOIL FREE OF DEBRIS.
4. SCRIBE LINE DETAIL APPLIES TO BOTH CONTIGUOUS AND NON-CONTIGUOUS PATTERNS.
5. CONCRETE SHALL BE CLASS "B" IN ACCORDANCE WITH SECTION 7 OF THE STANDARD SPECIFICATIONS.

SIDEWALK	Rev.	Date: 10/1/03 City Engineer	STD. NO. P-3

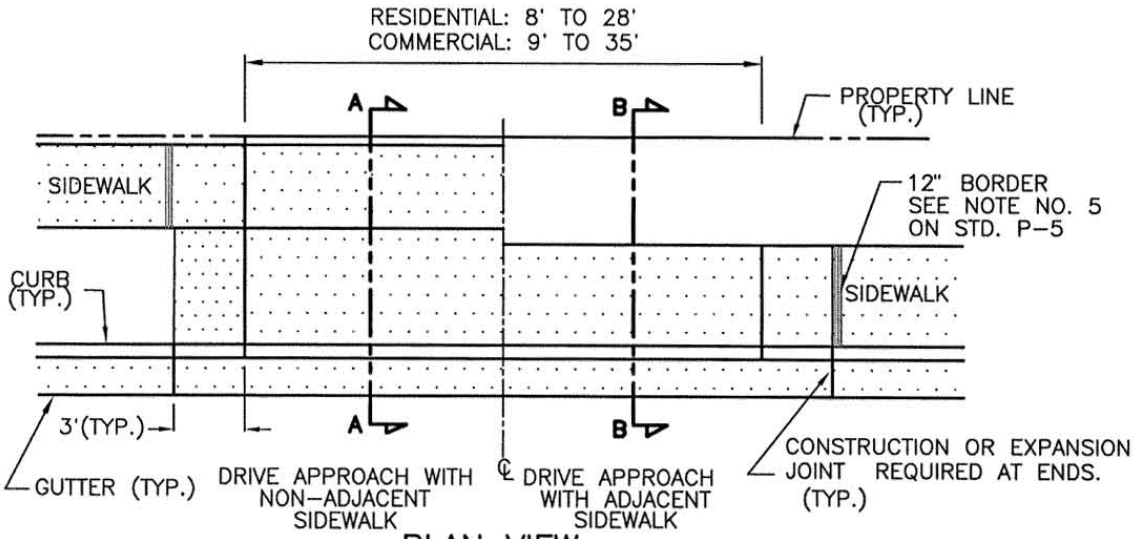

PLAN VIEW
N.T.S.

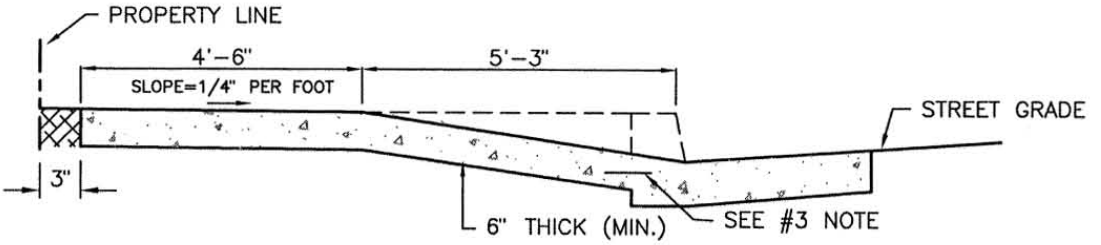

SECTION A-A
N.T.S.

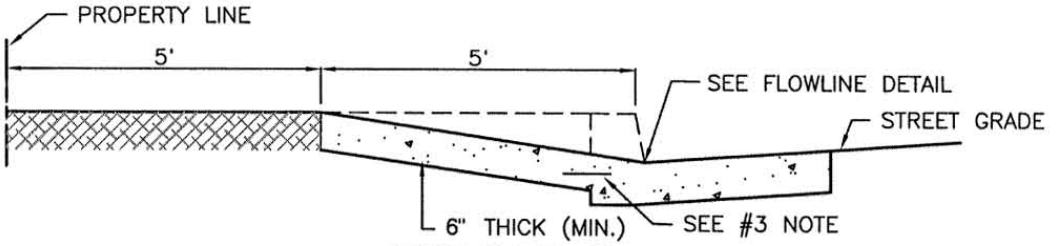

SECTION B-B
N.T.S.

NOTES:

1. WHERE EXPANSIVE SOILS ARE ENCOUNTERED, AS SET FORTH IN THE STANDARD SPECIFICATIONS, 6" OF IMPORTED SAND, COMPACTED TO 90% RELATIVE COMPACTION, SHALL BE PLACED UNDER THE CURB, GUTTER, AND SIDEWALK.
2. MATERIAL SHALL BE CLASS "A" CONCRETE IN ACCORDANCE WITH SECTION 7 OF THE STD. SPECIFICATIONS.
3. IN LIEU OF A CONTIGUOUS CURB/SIDEWALK SECTION, THE CONTRACTOR MAY USE DOWELS. DOWELS SHALL BE #3 SMOOTH BARS, 12" LONG, SET 4" INTO THE CURB AND 8" INTO THE SIDEWALK AT 48"C-C. AREA ALONG CURB, EXTENDING 2 FEET UNDER THE SIDEWALK, SHALL BE TREATED WITH SOIL STERILANT TO PREVENT WEED GROWTH BETWEEN CURB AND SIDEWALK.

DRIVE APPROACH CONSTRUCTION	Rev.	Date: 10/1/03 Harry A. Tow City Engineer	STD. NO. P-4

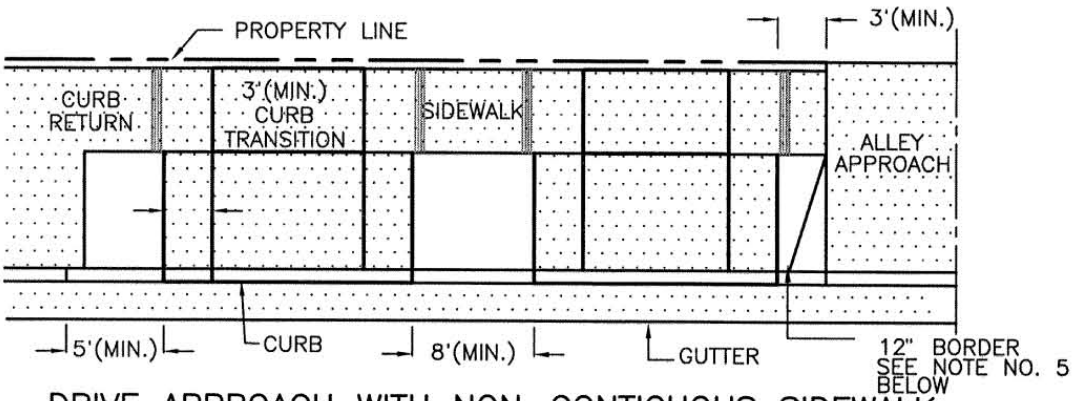

DRIVE APPROACH WITH NON–CONTIGUOUS SIDEWALK

N.T.S.

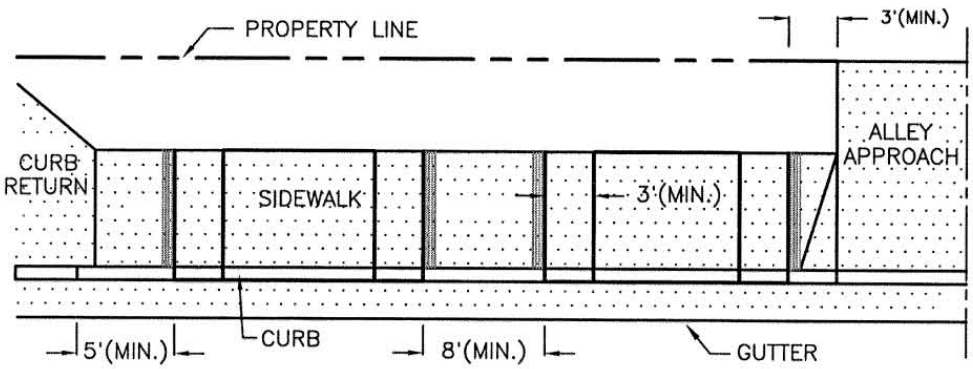

DRIVE APPROACH WITH CONTIGUOUS SIDEWALK

N.T.S.

NOTES:

1. 60% MAXIMUM OF CURB FACE MAY BE USED FOR DRIVE APPROACH THROAT WIDTH.
2. CONSTRUCTION OF DRIVE APPROACHES SHALL BE IN ACCORDANCE WITH STANDARD DRAWING NO. P–4.
3. RESIDENTIAL DRIVE APPROACH THROAT WIDTH SHALL BE 8 FEET MINIMUM AND 28 FEET MAXIMUM.
4. NO. 4 BARS @ 12" O.C. EACH WAY AND NO. 4 BARS TO EXTEND 12" BEYOND CONSTRUCTION JOINTS.
5. A 12" WIDE BORDER OF 1/4" X 1/4" WIDE GROOVES 3/4" APART SHALL BE LOCATED ON THE LEVEL SIDEWALK SURFACE AT THE TOP OF THE DRIVEWAY

RESIDENTIAL DRIVE APPROACH PLACEMENT	Rev.	Date: 10/1/03 Gary A. Tow City Engineer	STD. NO. P-5

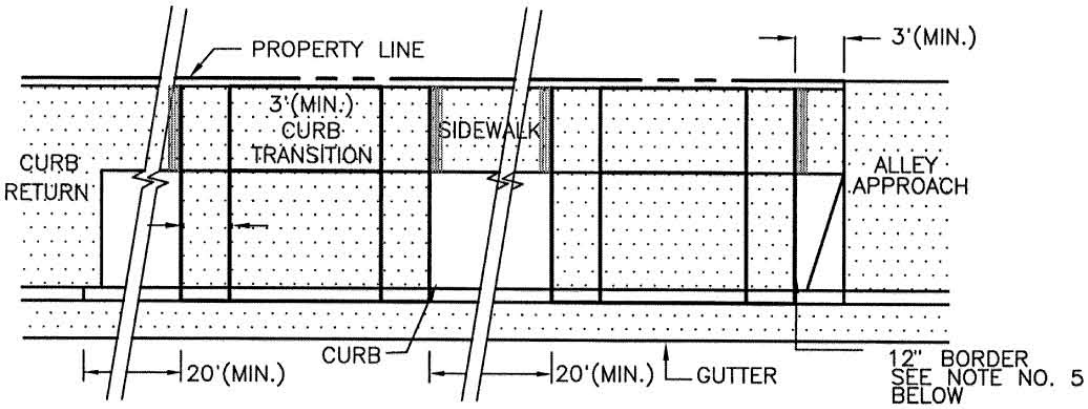

DRIVE APPROACH WITH NON-CONTIGUOUS SIDEWALK

N.T.S.

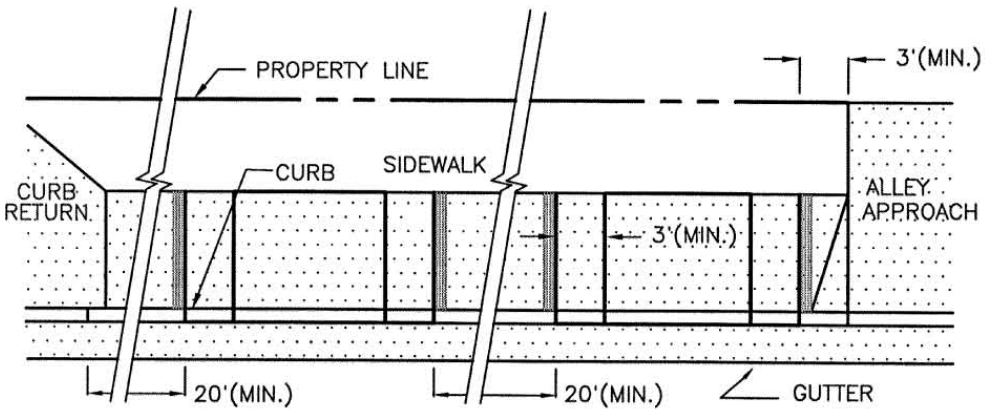

DRIVE APPROACH WITH CONTIGUOUS SIDEWALK

N.T.S.

NOTES:

1. 60% MAXIMUM OF CURB FACE MAY BE USED FOR DRIVE APPROACH THROAT WIDTH.
2. CONSTRUCTION OF DRIVE APPROACHES SHALL BE IN ACCORDANCE WITH STANDARD DRAWING NO. P-4.
3. COMMERCIAL DRIVE APPROACH SHALL BE 9 FEET MINIMUM AND 35 FEET MAXIMUM.
4. NO. 4 BARS @ 12" O.C. EACH WAY AND NO. 4 BARS TO EXTEND 12" BEYOND CONSTRUCTION JOINTS.
5. A 12" WIDE BORDER OF 1/4" X 1/4" WIDE GROOVES 3/4" APART SHALL BE LOCATED ON THE LEVEL SIDEWALK SURFACE AT THE TOP OF THE DRIVEWAY

COMMERCIAL & INDUSTRIAL DRIVE APPROACH PLACEMENT	Rev.	Date: 10/1/03 Gary A. Tow City Engineer	STD. NO. P-6

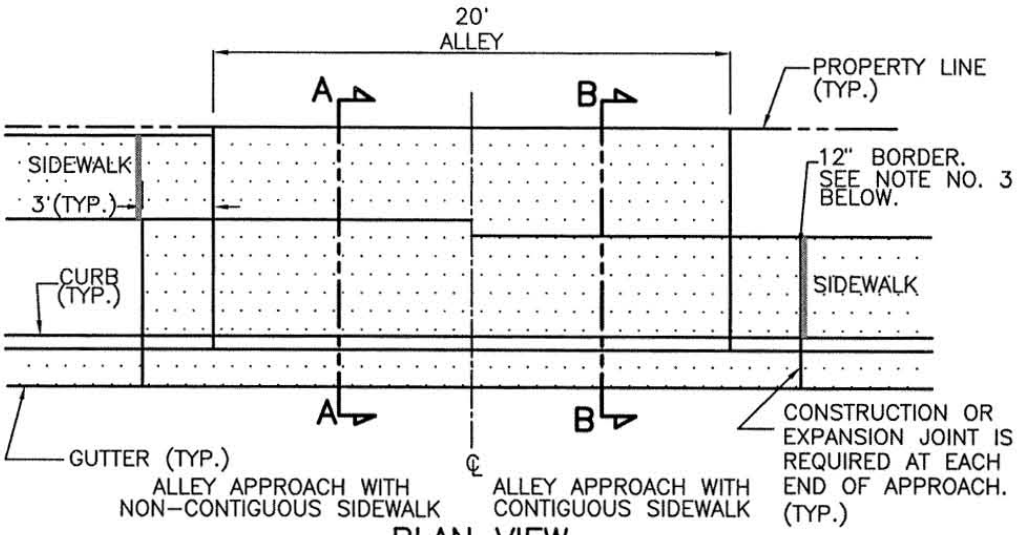

PLAN VIEW
N.T.S.

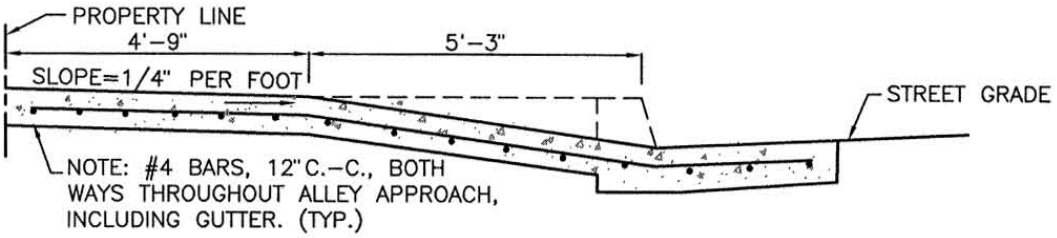

SECTION A-A
N.T.S.

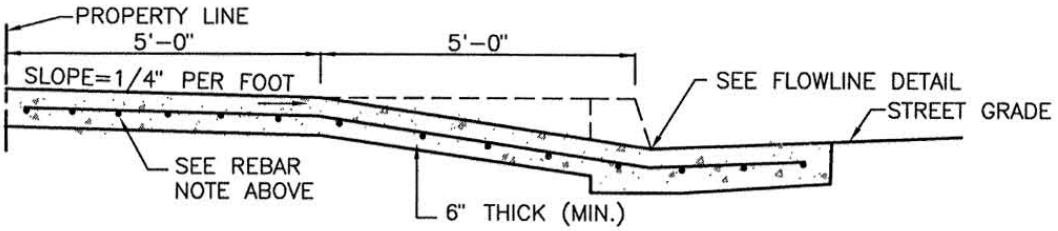

SECTION B-B
N.T.S.

NOTES:

1. WHERE EXPANSIVE SOILS ARE ENCOUNTERED, AS SET FORTH IN THE STANDARD SPECIFICATIONS, 6" OF IMPORTED SAND, COMPACTED TO 90% RELATIVE COMPACTION SHALL BE PLACED UNDER THE CURB, GUTTER, AND SIDEWALK.
2. MATERIAL SHALL BE CLASS "A" CONCRETE IN ACCORDANCEWITH SECTION 7 OF STD. SPECIFICATIONS.
3. A 12" WIDE BORDER OF 1/4" X 1/4" WIDE GROOVES 3/4" APART SHALL BE LOCATED ON THE LEVEL SIDEWALK SURFACE AT THE TOP OF THE DRIVEWAY

ALLEY APPROACH CONSTRUCTION	Rev.	Date: 10/1/03 Gary A. Tous City Engineer	STD. NO. P-9

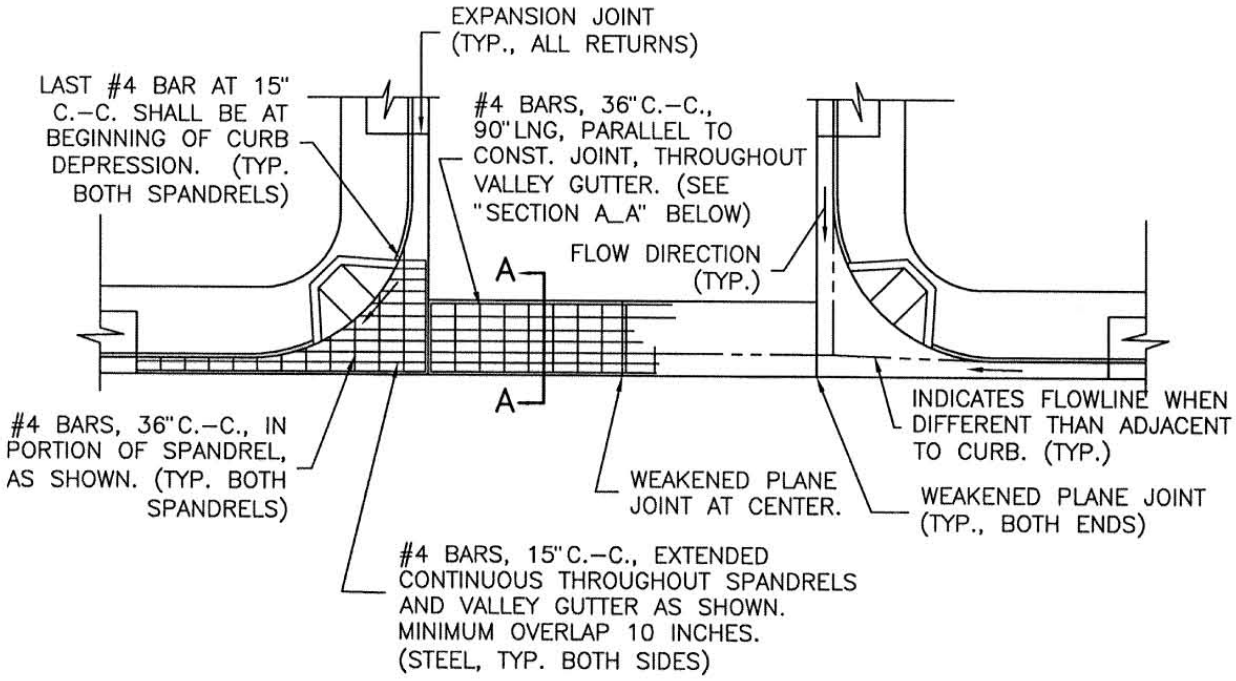

PLAN VIEW

N.T.S.

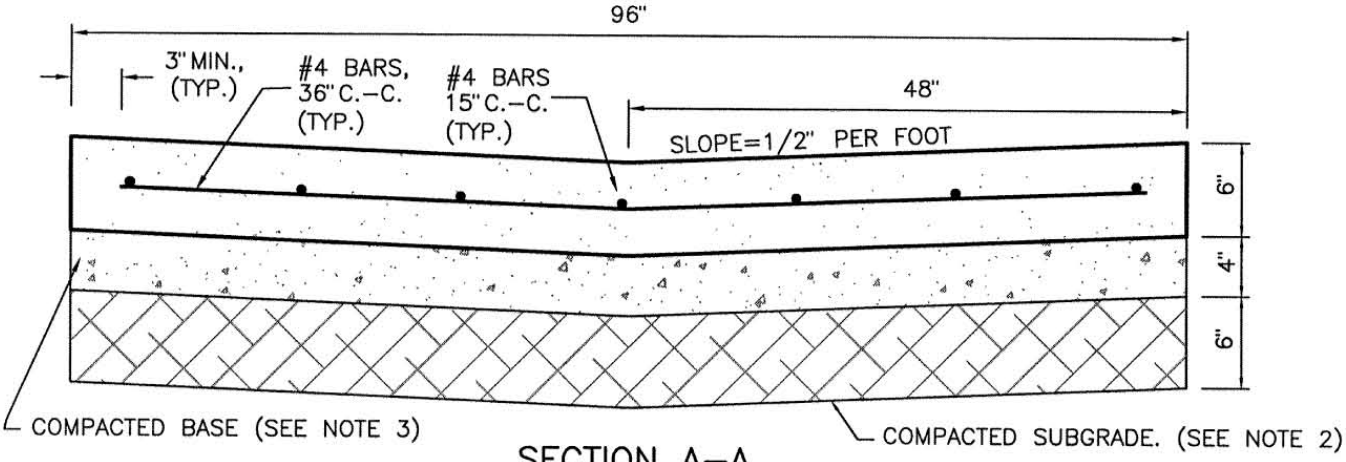

SECTION A–A

N.T.S.

NOTES:

1. MATERIAL SHALL BE CLASS "B" CONCRETE IN ACCORDANCE W/ SECTION 7 OF STANDARD SPECIFICATIONS.
2. COMPACT SUBGRADE TO 92% RELATIVE COMPACTION, PER ASTM D1557
3. BASE SHALL BE 4 INCHES CLII AGGREGATE BASE OR DECOMPOSED GRANITE, TO 95% RELATIVE COMPACTION PER ASTM D1557.
4. MINIMUM SLOPE SHALL BE 0.0030.

VALLEY GUTTER	Rev.	Date: 10/1/03 Gary A. Tone City Engineer	STD. NO. P-10

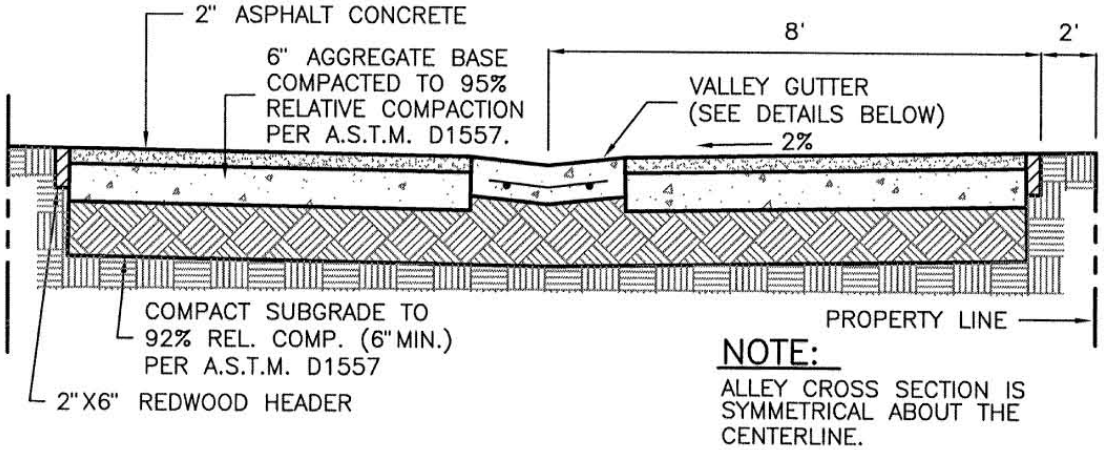

NOTE:
ALLEY CROSS SECTION IS SYMMETRICAL ABOUT THE CENTERLINE.

ALLEY CROSS SECTION
N.T.S.

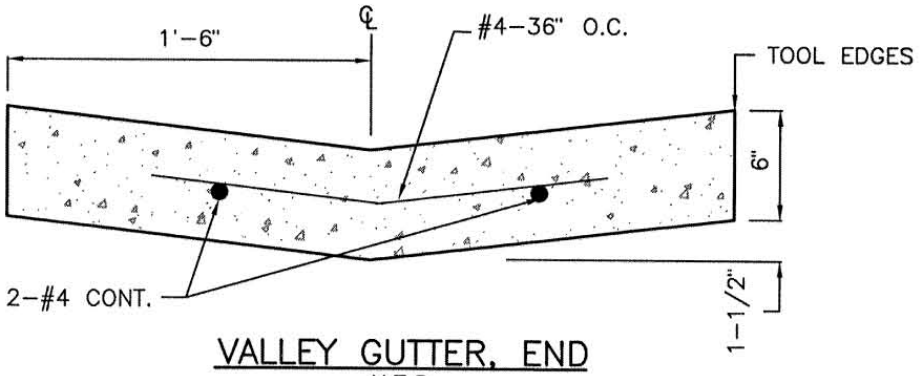

VALLEY GUTTER, END
N.T.S.

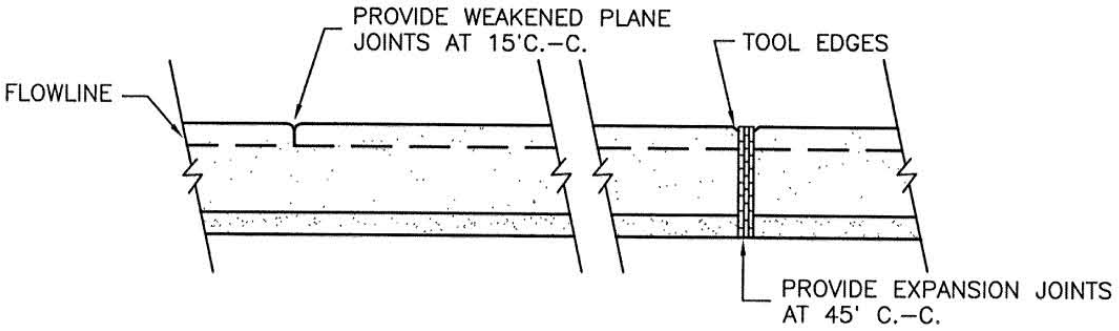

VALLEY GUTTER, PROFILE
N.T.S.

ALLEY WITH VALLEY GUTTER	Rev.	Date: 10/1/03 City Engineer	STD. NO. P-11

STREET CLASSIFICATION	T.I.
RESIDENTIAL STREET	5.0
RESIDENTIAL COLLECTOR	5.5
COLLECTOR STREET	6.0
ARTERIAL STREET	7.0

AREAS CONSIDERED AS SHOULDERS MAY HAVE T.I.'S EQUAL TO 60% OF THAT REQUIRED FOR THE TRAVEL LANES. THE MINIMUM T.I. FOR DESIGN OF SHOULDERS IS 4.5.

STREETS SHALL BE DESIGNED FOR THE T.I. REQUIRED FOR THE STREET'S CLASSIFICATION AS SHOWN ON THE CURRENT GENERAL PLAN, EXCEPT WHERE TRAFFIC STUDIES INDICATE A HIGHER T.I. MAY BE JUSTIFIED BY THE CITY.

TRAFFIC INDEX CHART	Rev.	Date: 10/1/03 Gary G. Tow City Engineer	STD. NO. P-12

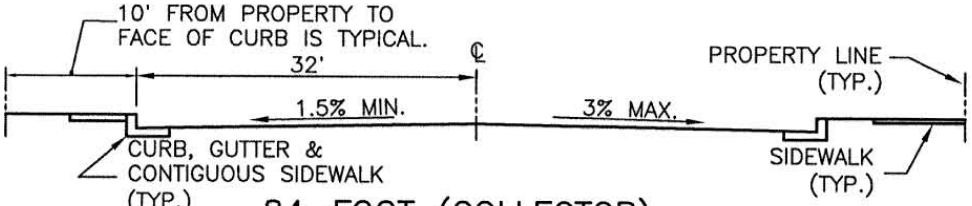

84–FOOT (COLLECTOR)
RIGHT–OF–WAY

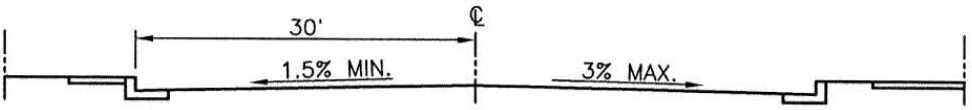

80–FOOT (COLLECTOR)
RIGHT–OF–WAY

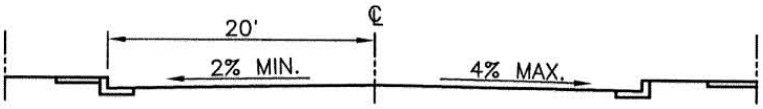

60–FOOT (LOCAL)
RIGHT–OF–WAY

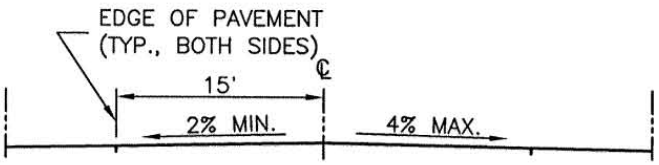

50–FOOT (LOCAL)
RIGHT–OF–WAY

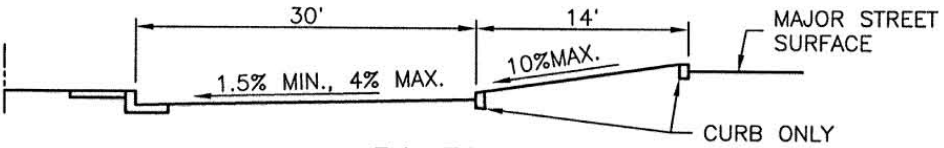

54–FOOT
FRONTAGE OR ACCESS ROAD

TYPICAL STREET SECTIONS	Rev.	Date: 10/1/03 City Engineer	STD. NO. P-14

NOTE: CUL-DE-SAC STREETS SHALL NOT BE MORE THAN FIVE HUNDRED FEET (500') IN LENGTH.

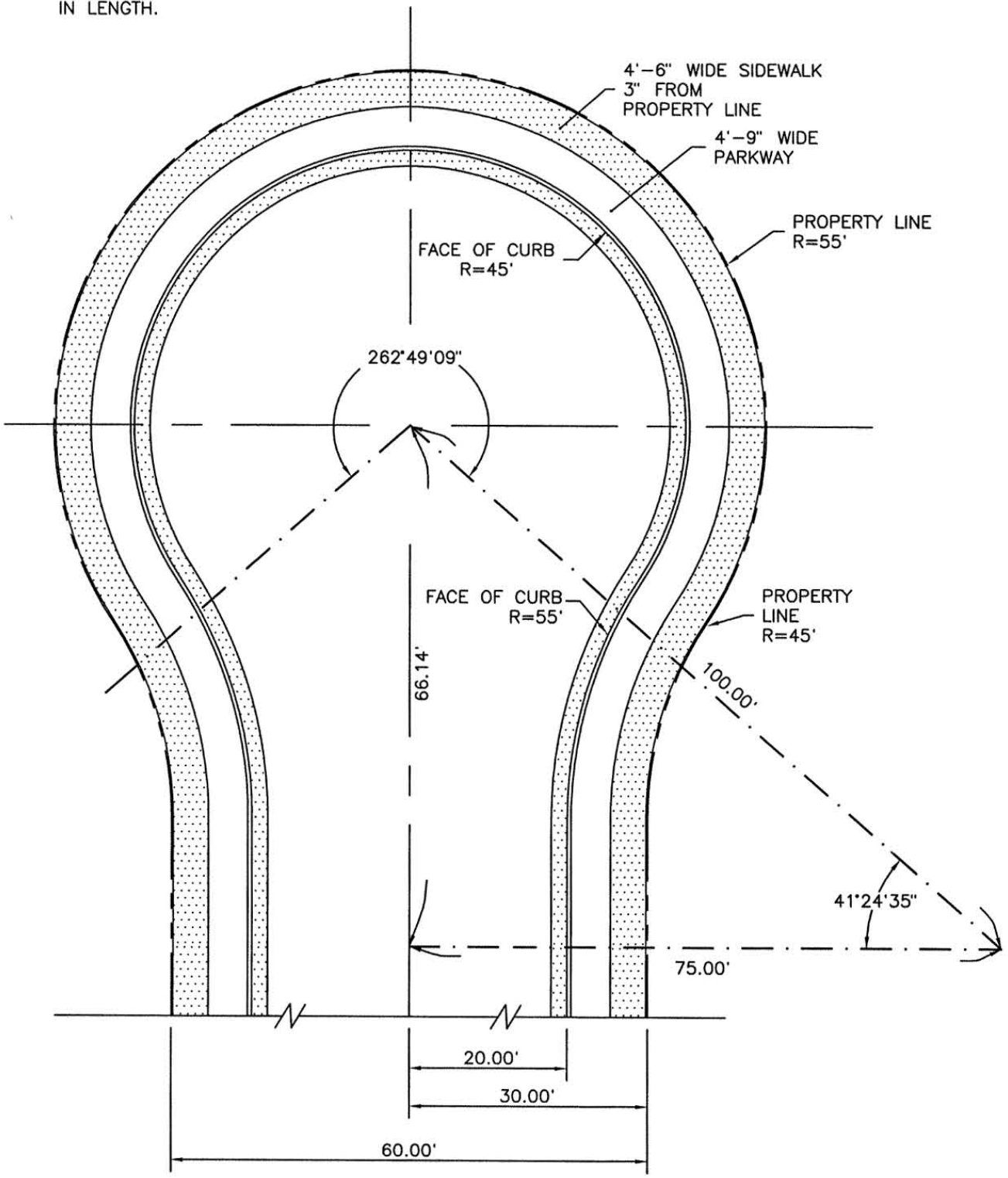

S:\CITY STANDARDS\LEMOORE\P-15.DWG

STANDARD CUL-DE-SAC WITH PARKWAY PATTERN	Rev.	Date: 10/1/03 Harry A. Tow City Engineer	STD. NO. P-15

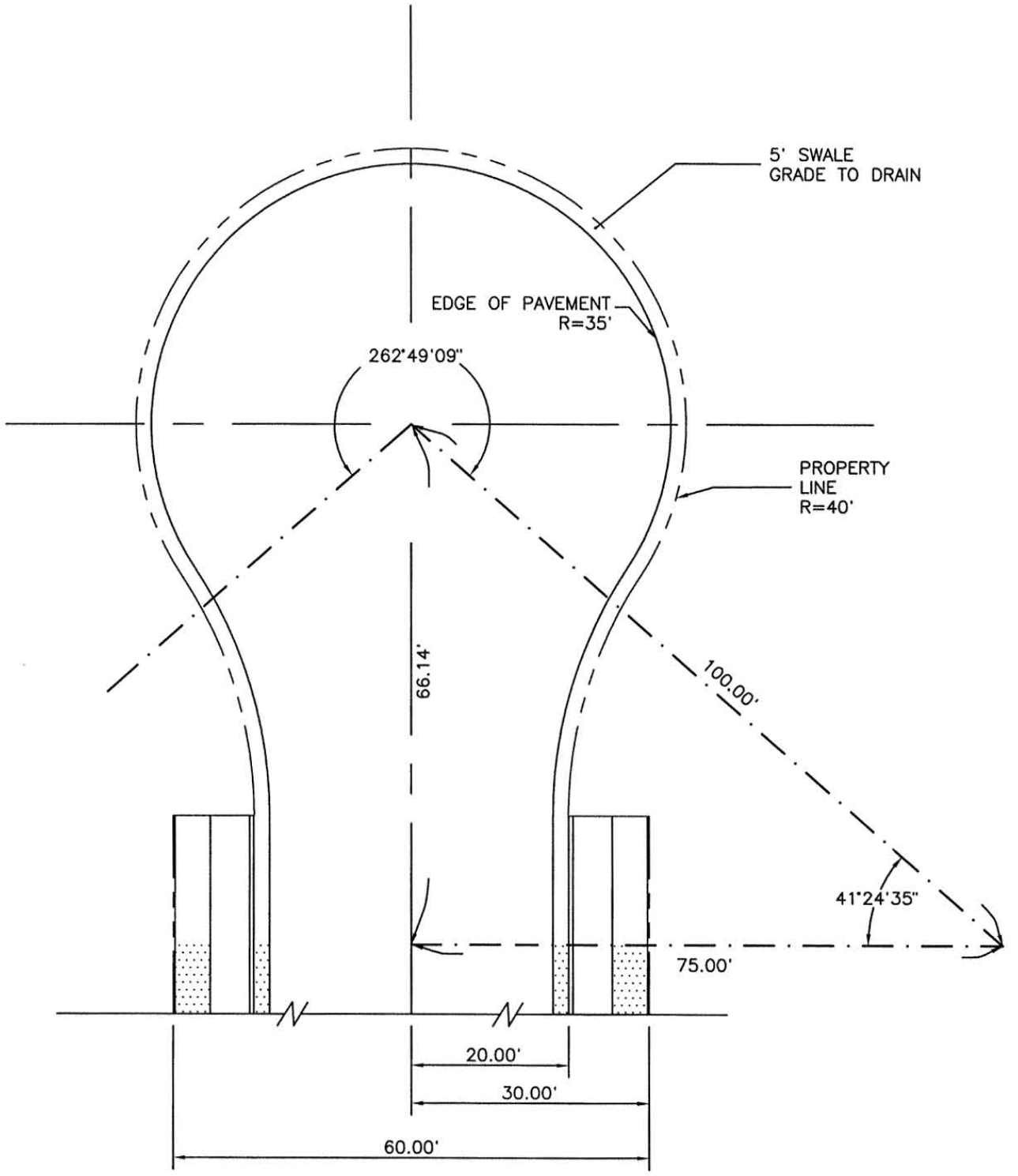

S:\CITY STANDARDS\LEMOORE\P-15.DWG

TEMPORARY TURNAROUND	Rev.	Date: 10/1/03 City Engineer	STD. NO. P-15A

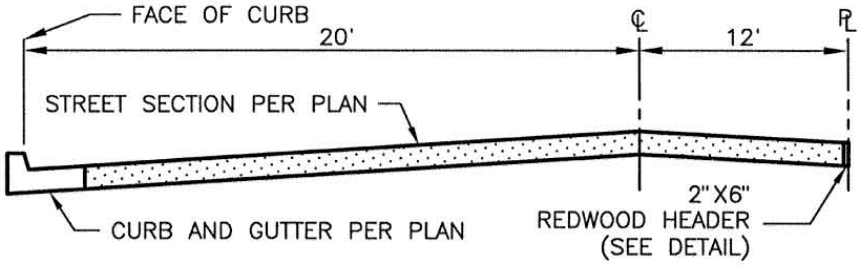

2/3 SECTION OF 60' STREET

N.T.S.

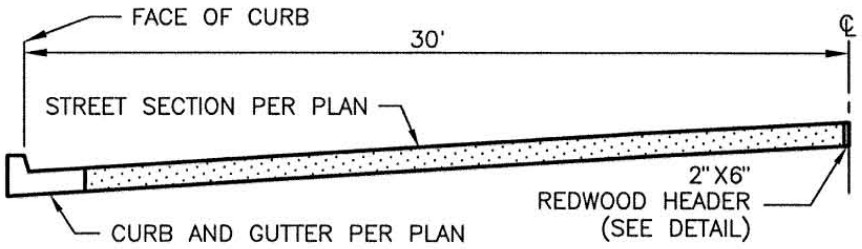

1/2 SECTION OF 80' STREET

N.T.S.

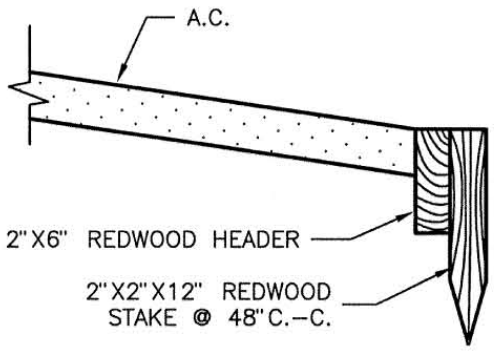

REDWOOD HEADER DETAIL

N.T.S.

NOTE:

SLOPE 4:1 MAX. FROM REDWOOD HEADER TO EXISTING SURFACE OR NATURAL GROUND.

BOUNDARY STREET IMPROVEMENTS	Rev.	Date: 10/1/03 Larry A. Tow City Engineer	STD. NO. P-16

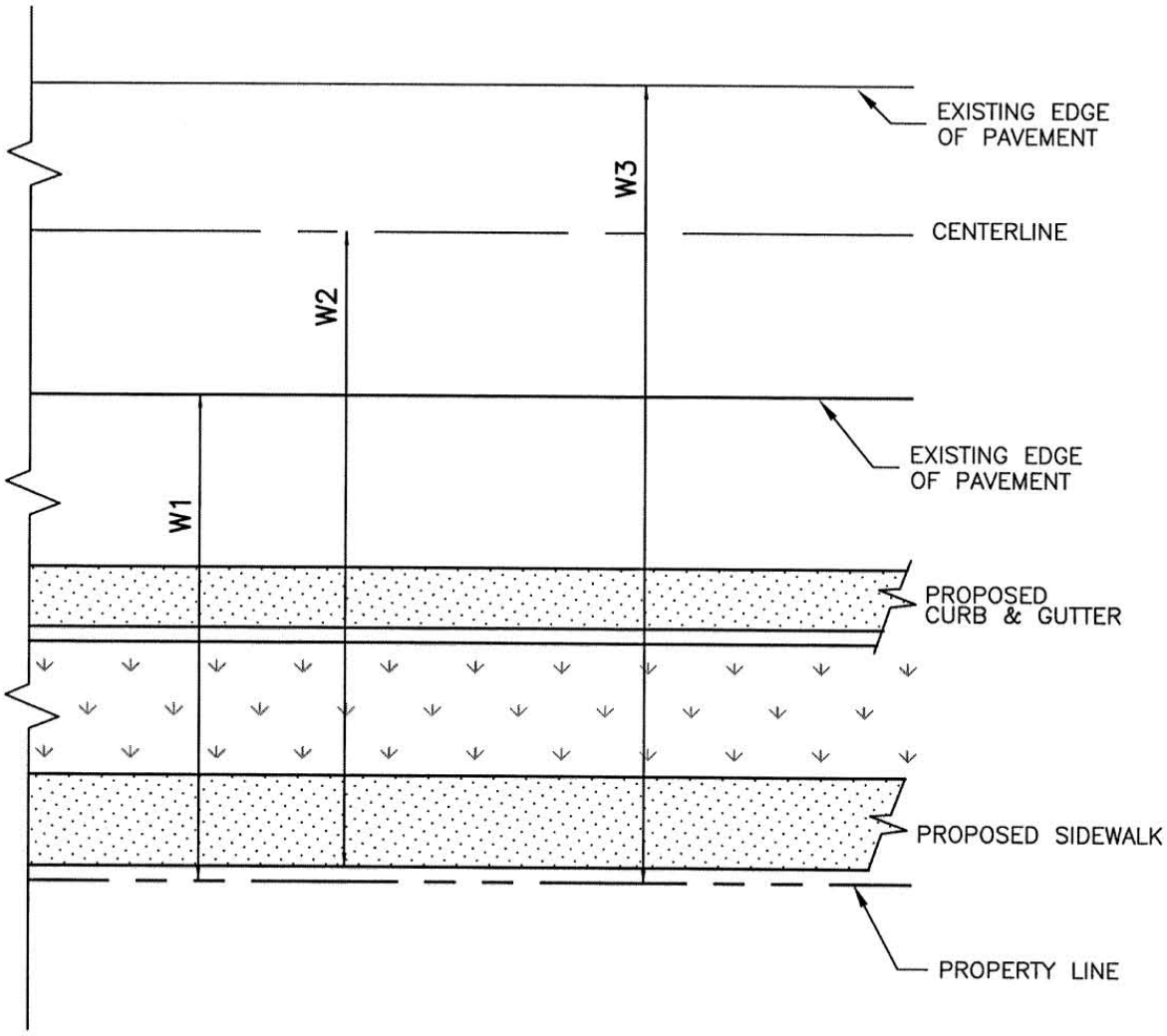

NOTES:

A. IF THE TWO CONDITIONS BELOW CAN BE MET, THE DEVELOPER WILL BE REQUIRED TO CONSTRUCT ALL IMPROVEMENTS FOR THE WIDTH W1.

B. IF THE FIRST CONDITION CANNOT BE MET USING THE EXISTING PAVEMENT EDGE, BUT COULD BE MET BY RECONSTRUCTING THE WIDTH W2, THAT SHALL BE THE REQUIREMENT.

C. IF THE SECOND CONDITION IS NOT MET, OR IF THE FIRST CONDITION CANNOT BE MET BY THE METHODS OUTLINED IN A OR B ABOVE, THE DEVELOPER SHALL RECONSTRUCT ALL IMPROVEMNETS FOR THE WIDTH W3.

CONDITION 1: THE CROSS SLOPE FROM THE EXISTING EDGE OF PAVEMENT TO THE PROPOSED LIP OF GUTTER, AND THE OVERALL CROSS SLOPE FROM THE CENTERLINE OF THE ROAD TO THE PROPOSED LIP OF GUTTER, SHALL BE WITHIN THE LIMITS SHOWN ON STANDARD DRAWING P–14.

CONDITION 2: THE STRUCTURAL SECTION OF THE EXISTING PAVEMENT MUST BE ADEQUATE FOR THE TRAFFIC INDEX SHOWN ON STANDARD DRAWING P–12 FOR THE ROAD'S OFFICIAL DESIGNATION AS DETERMINED BY THE COMMUNITY DEVELOPMENT DIRECTOR OR SUCH GREATER T.I. AS INDICATED BY A TRAFFIC STUDY.

IMPROVEMENTS REQUIRED ON EXISTING CITY-MAINTAINED STREETS	Rev.	Date: 10/1/03 Larry A. Tow City Engineer	STD. NO. P-17

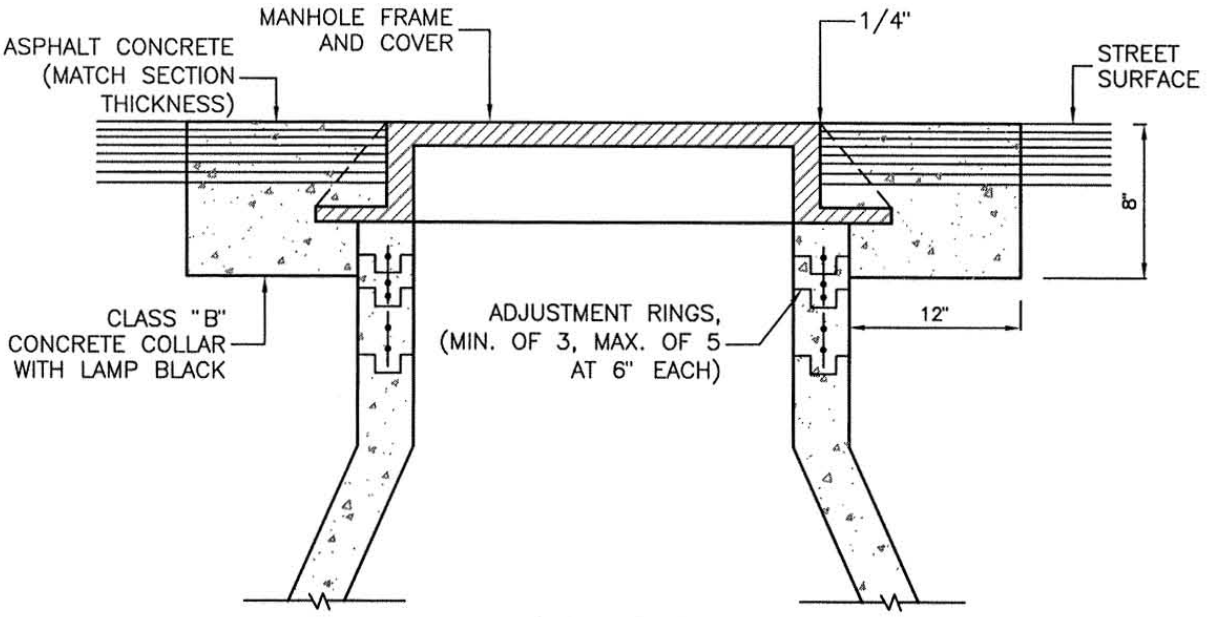

MANHOLE
N.T.S.

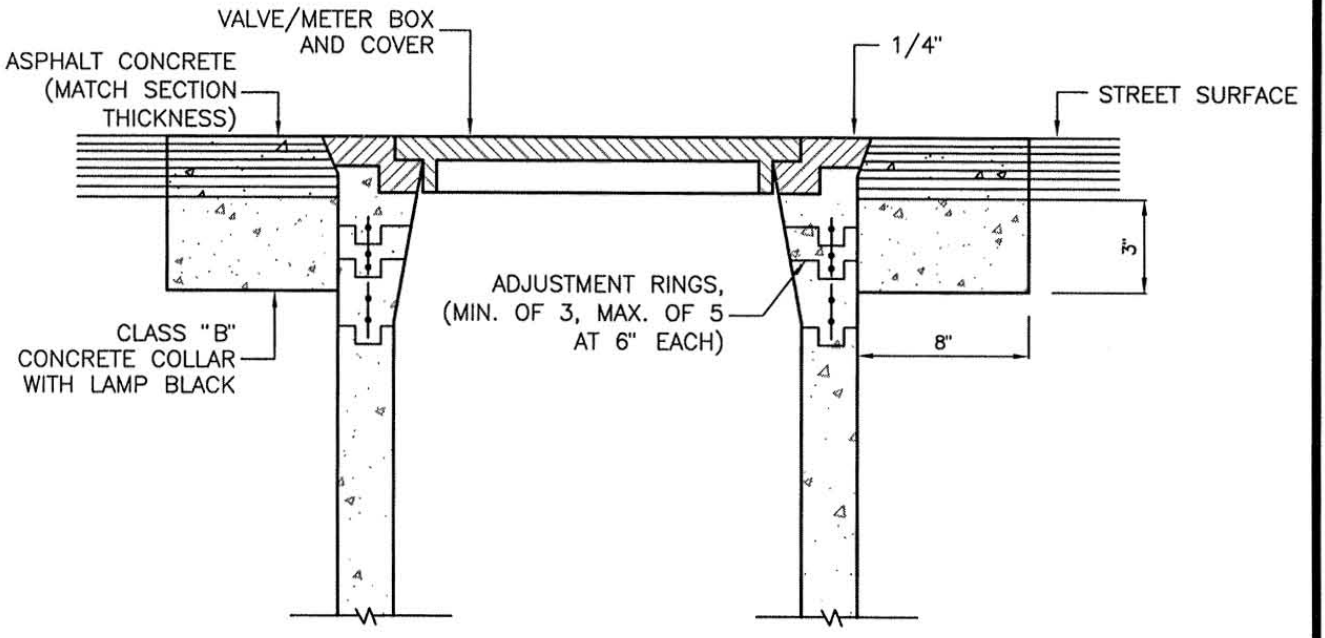

VALVE & METER BOXES
(VALVE BOX SHOWN)
N.T.S.

MANHOLE & VALVE BOX COLLAR FINISH	Rev.	Date: 10/1/03 City Engineer	STD. NO. P-18

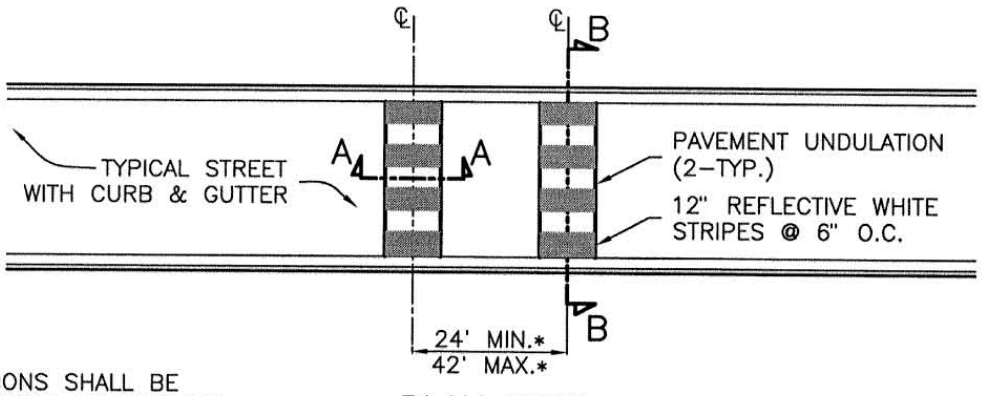

PLAN VIEW

N.T.S.

NOTES:

1. UNDULATIONS SHALL BE CONSTRUCTED OF TYPE "B" ASPHALT CONCRETE, 1/2" MAXIMUM, MEDIUM GRADED AGGREGATE.
2. LOCATIONS TO BE DETERMINED BY CITY STAFF.
3. A STANDARD CALTRANS "W37 30" WARNING SIGN STATING "BUMPS" WITH 5" SERIES E SERIES SHALL BE INSTALLED AT LEAST 100 FEET FROM THE DESIGNATED UNDULATION.
4. SPEED ADVISORY SIGNS STATING "10 M.P.H." SHALL BE INSTALLED BELOW THE "BUMP" WARNING SIGN.

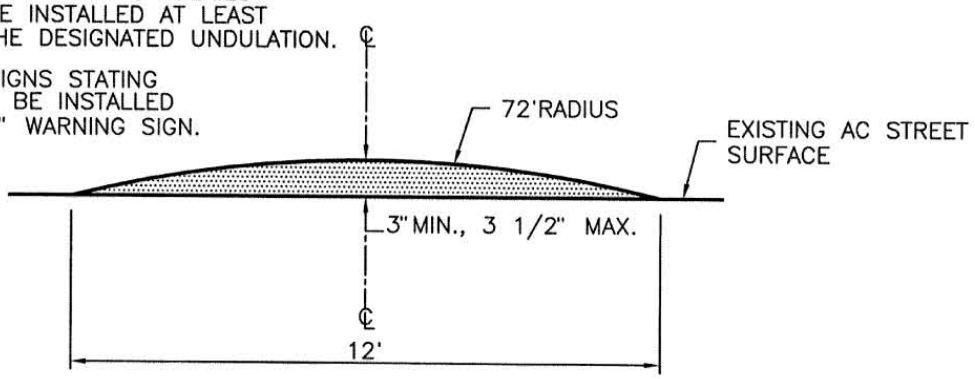

A–A SECTION

N.T.S.

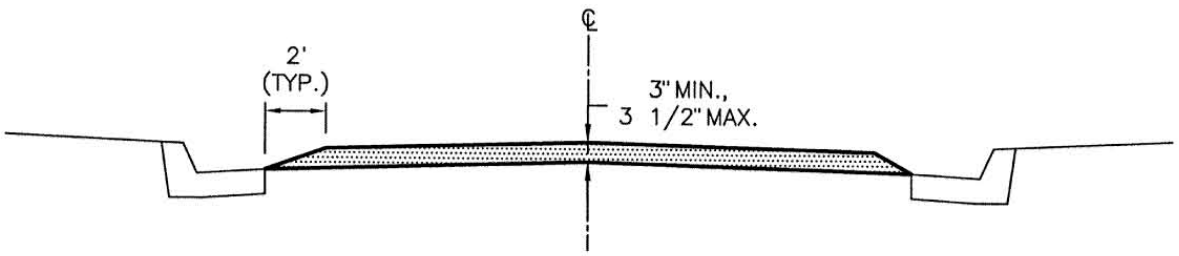

* MAY BE MODIFIED BY CITY

B–B SECTION

N.T.S.

PAVEMENT UNDULATIONS	Rev.	Date: 10/1/03 City Engineer	STD. NO. P-19

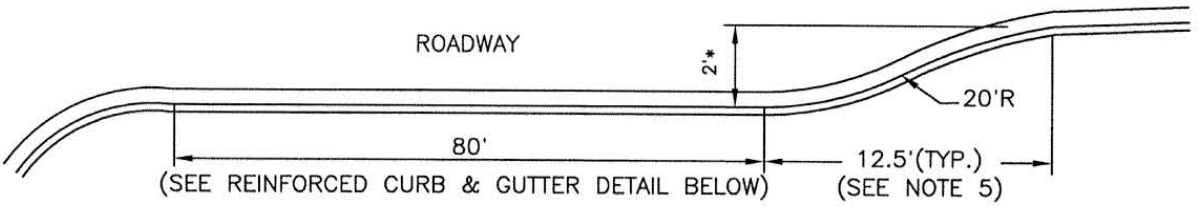

FAR SIDE INTERSECTION

N.T.S.

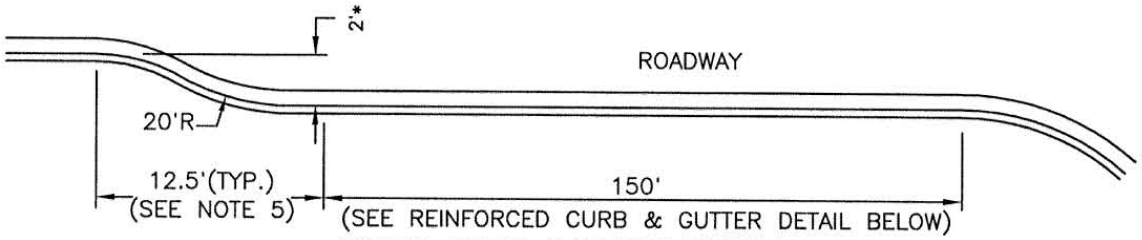

NEAR SIDE INTERSECTION

N.T.S.

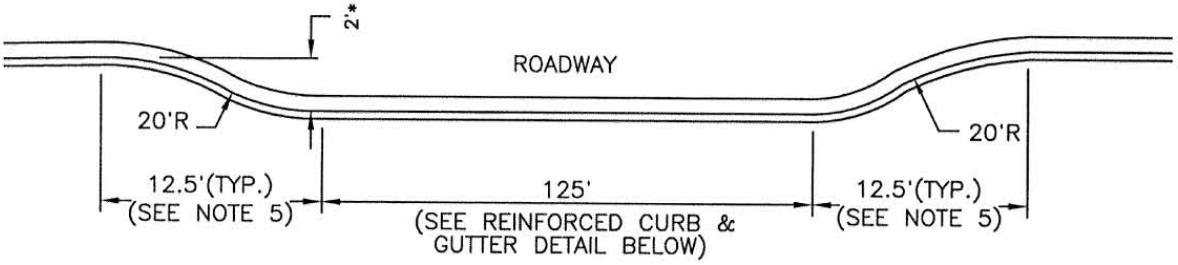

MID–BLOCK

N.T.S.

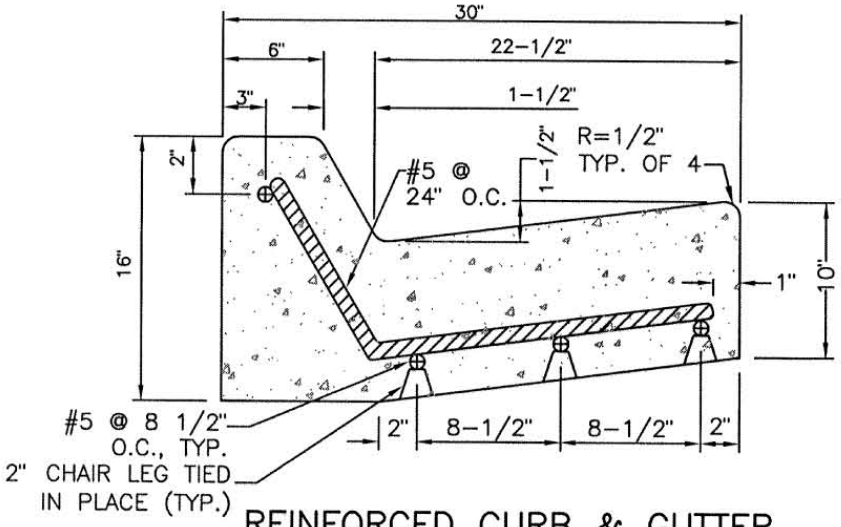

REINFORCED CURB & GUTTER

N.T.S.

NOTES:

1. 5' MIN. TRANSITION TO STANDARD CURB & GUTTER.
2. 20" LAP REQUIRED ON ALL BAR SPLICES.

*3. WHERE PARKING LANE DOES NOT EXIST, 10' WIDE BUS BAY WILL BE REQUIRED.

4. USE CLASS "B" CONCRETE PER SECTION 7 OF THE STANDARD SPECIFICATIONS.
5. ON ARTERIAL STREET, USE 40:1 TRANSITION.

BUS BAY	Rev.	Date: 10/1/03 City Engineer	STD. NO. P-20

CONTROL PANEL NOTES:

1. ALL EXPOSED CONDUIT TO BE GRC. ALL UNDERGROUND CONDUIT TO BE PVC SCH. 40. ALL FLEXIBLE CONDUIT TO BE "SEAL-TITE" FLEX.
2. ALL WIRE SHALL BE TYPE THWN COPPER.
3. CONTRACTOR SHALL BE RESPONSIBLE FOR FINAL HOOK-UPS AND OPERATIONAL TEST OF ENTIRE SYSTEM.
4. CONTRACTOR TO COORDINATE HIS WORK WITH P.G.& E. AND PAY FOR ALL PERMITS.
5. ALL WORK SHALL BE DONE IN CONFORMANCE WITH THE LATEST EDITION OF THE NATIONAL ELECTRICAL CODE, SOUTHERN CALIFORNIA EDISON CO. AND OTHER APPLICABLE STATE AND LOCAL LAWS, ORDINANCES AND REGULATIONS.
6. ENTIRE ELECTRICAL SYSTEM TO BE GROUNDED IN ACCORDANCE WITH ARTICLE 250 OF THE NATIONAL ELECTRICAL CODE (CURRENT EDITION) AND THE GOVERNING ELECTRICAL UTILITY.
7. THE CONTROL PANEL WILL BE HOUSED IN A LOCKABLE APPROVED FIBERGLASS NEMA 4X ENCLOSURE WITH STAINLESS STEEL HARDWARE. NO DEVICES ARE TO BE MOUNTED IN THE CONTROL PANEL ENCLOSURE DOOR.

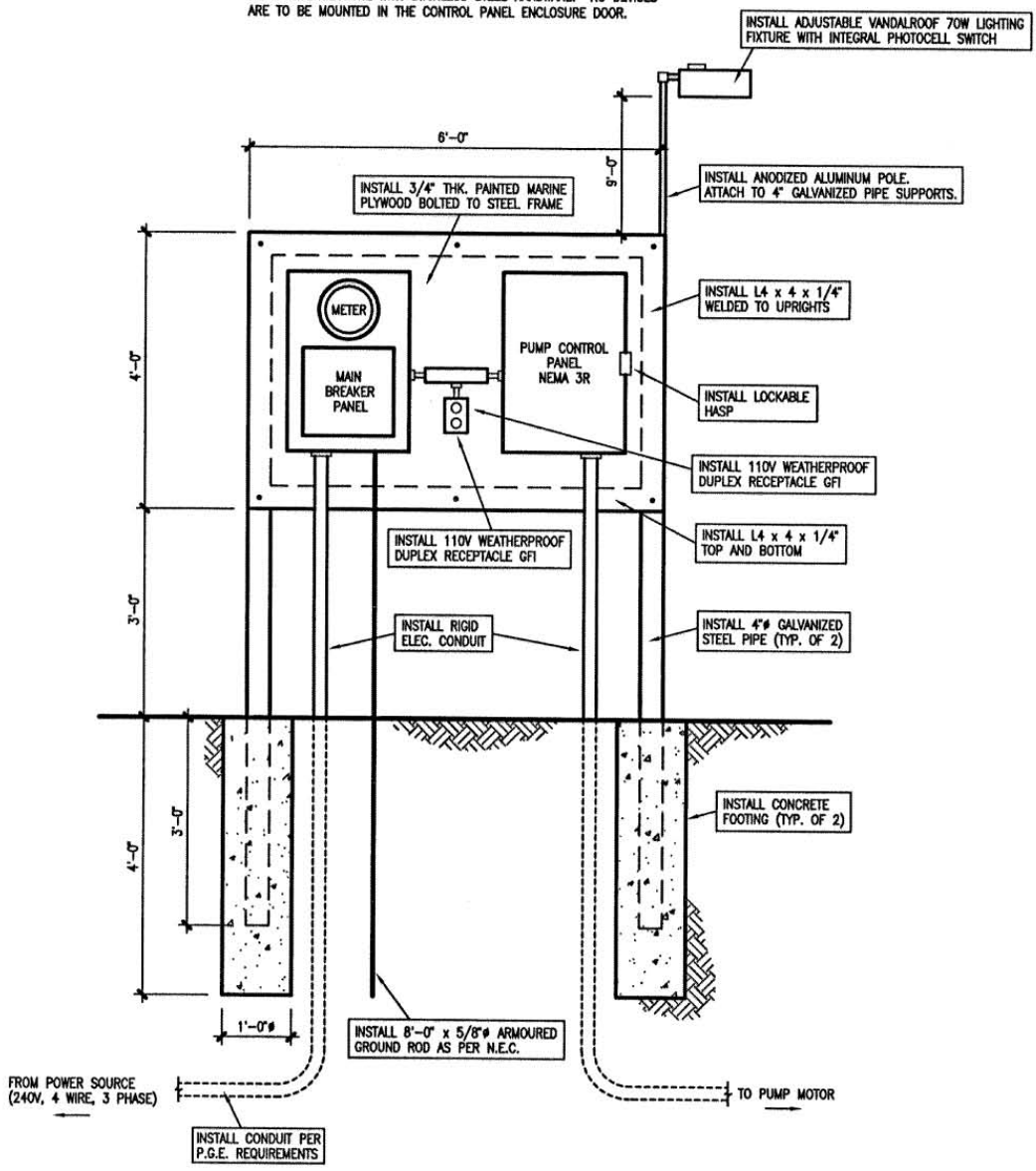

CONTROL PANEL	No Scale Rev.	Date: 10/1/03 City Engineer	STD. NO. P-21

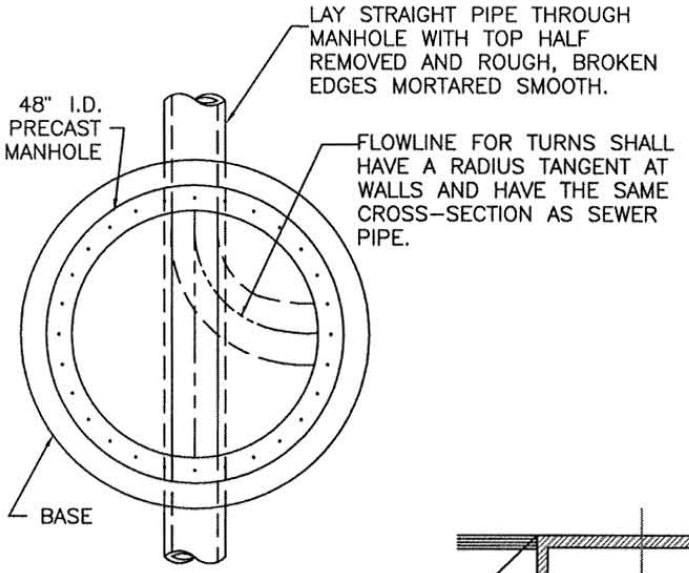

SECTION A–A
N.T.S.

NOTES:

1. MANHOLE SHAFTS, TAPERED SECTIONS, AND ADJUSTMENT RINGS SHALL CONFORM TO A.S.T.M. C478.
2. ALL JOINTS TO BE GROUTED SMOOTH INSIDE AND OUT.
3. THE INSIDE BOTTOM OF THE MANHOLE SHALL HAVE A STEEL TROWEL FINISH.
4. KENT SEAL, OR APPROVED EQUAL, SHALL BE USED TO SEAL ALL MANHOLE WILL REQUIRE A 60" ø SEWER MANHOLE JOINTS.
5. IF GROUNDWATER ENCOUNTERED, ADD 1–1/2" MAXIMUM DIAMETER BASE ROCK TO A DEPTH OF ONE (1) FOOT BELOW BASE.
6. PIPES ENTERING MANHOLE THAT ARE GREATER THAN 18" IN ø AND AT 90° WILL REQUIRE A 60" ø SEWER MANHOLE

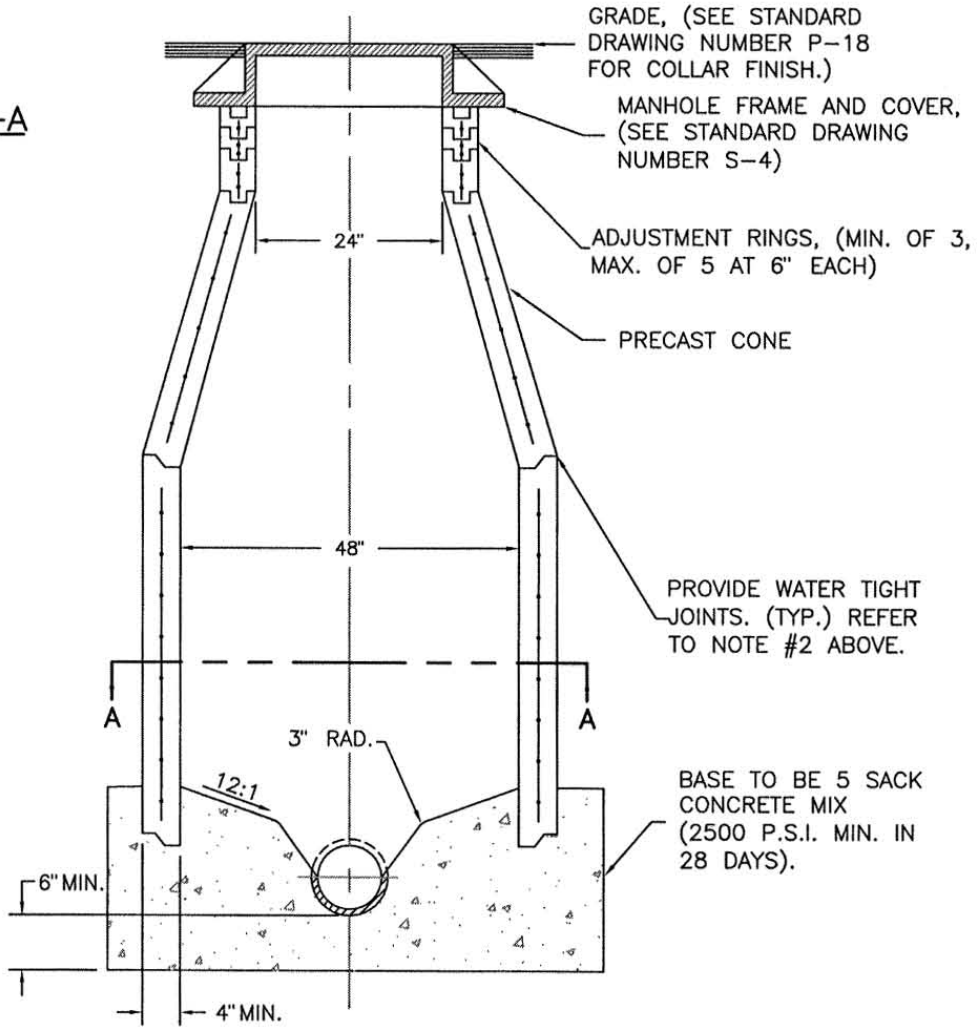

ELEVATION
N.T.S.

48" SEWER MANHOLE	Rev.	Date: 10/1/03 Harry A. Tow City Engineer	STD. NO. S-1

NOTES:

1. MANHOLE SHAFTS, TAPERED SECTIONS, AND ADJUSTMENT RINGS SHALL CONFORM TO A.S.T.M. C478.
2. ALL JOINTS TO BE GROUTED SMOOTH INSIDE AND OUT.
3. THE INSIDE BOTTOM OF THE MANHOLE SHALL HAVE A STEEL TROWEL FINISH.
4. KENT SEAL, OR APPROVED EQUAL, SHALL BE USED TO SEAL ALL MANHOLE WILL REQUIRE A 60" ø SEWER MANHOLE JOINTS.
5. IF GROUNDWATER ENCOUNTERED, ADD 1-1/2" MAXIMUM DIAMETER BASE ROCK TO A DEPTH OF ONE (1) FOOT BELOW BASE.
6. PIPES ENTERING MANHOLE THAT ARE GREATER THAN 18" IN ø AND AT 90° WILL REQUIRE A 60" ø SEWER MANHOLE

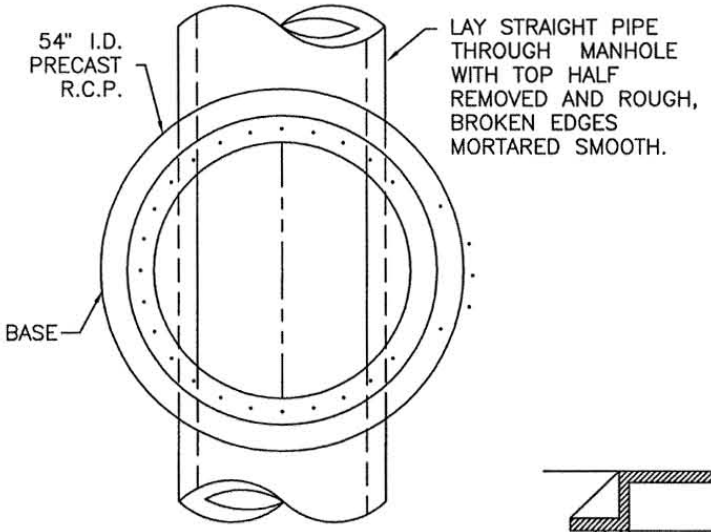

SECTION A–A
N.T.S.

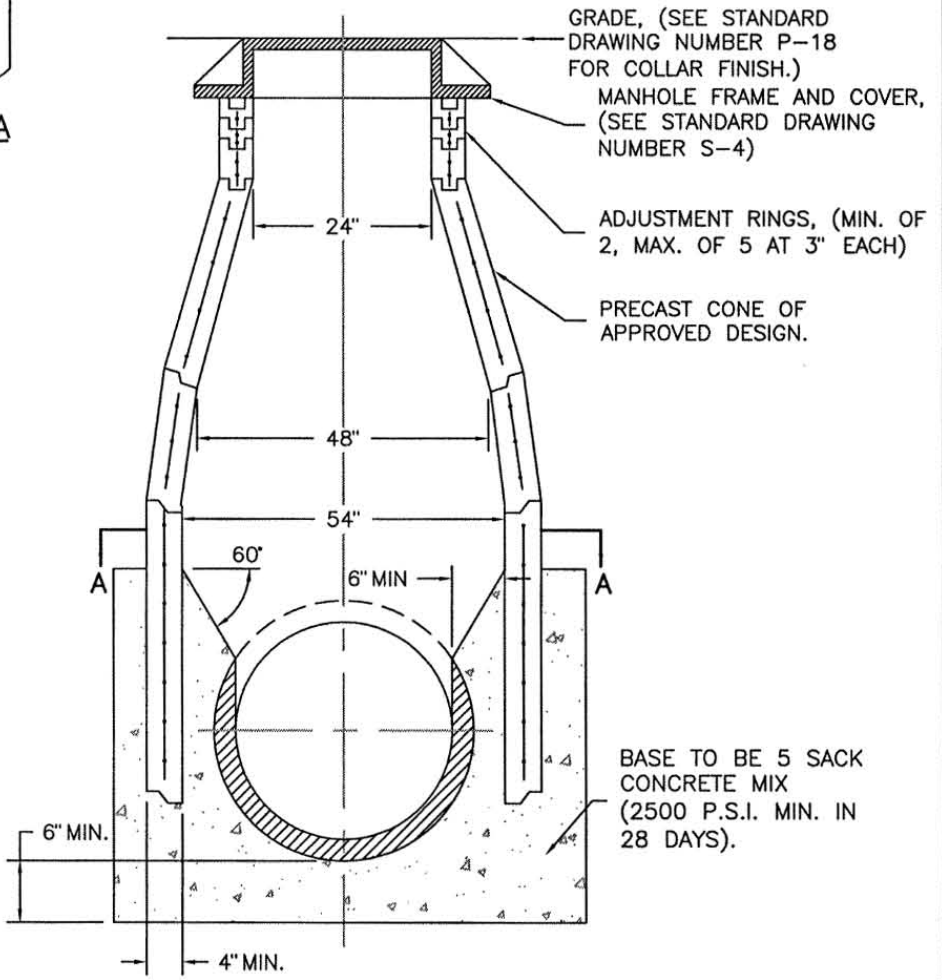

ELEVATION
N.T.S.

54" SEWER MANHOLE	Rev.	Date: 10/1/03 City Engineer	STD. NO. S-2

NOTES:

1. MANHOLE SHAFTS, TAPERED SECTIONS, AND ADJUSTMENT RINGS SHALL CONFORM TO A.S.T.M. C478.
2. ALL JOINTS TO BE GROUTED SMOOTH INSIDE AND OUT.
3. THE INSIDE BOTTOM OF THE MANHOLE SHALL HAVE A STEEL TROWEL FINISH.
4. KENT SEAL, OR APPROVED EQUAL, SHALL BE USED TO SEAL ALL MANHOLE WILL REQUIRE A 60" ø SEWER MANHOLE JOINTS.
5. IF GROUNDWATER ENCOUNTERED, ADD 1-1/2" MAXIMUM DIAMETER BASE ROCK TO A DEPTH OF ONE (1) FOOT BELOW BASE.
6. PIPES ENTERING MANHOLE THAT ARE GREATER THAN 18" IN ø AND AT 90° WILL REQUIRE A 60" ø SEWER MANHOLE

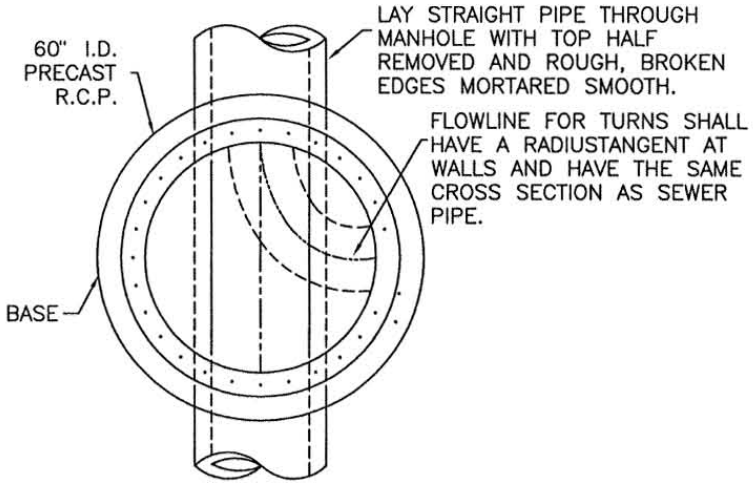

SECTION A-A
N.T.S.

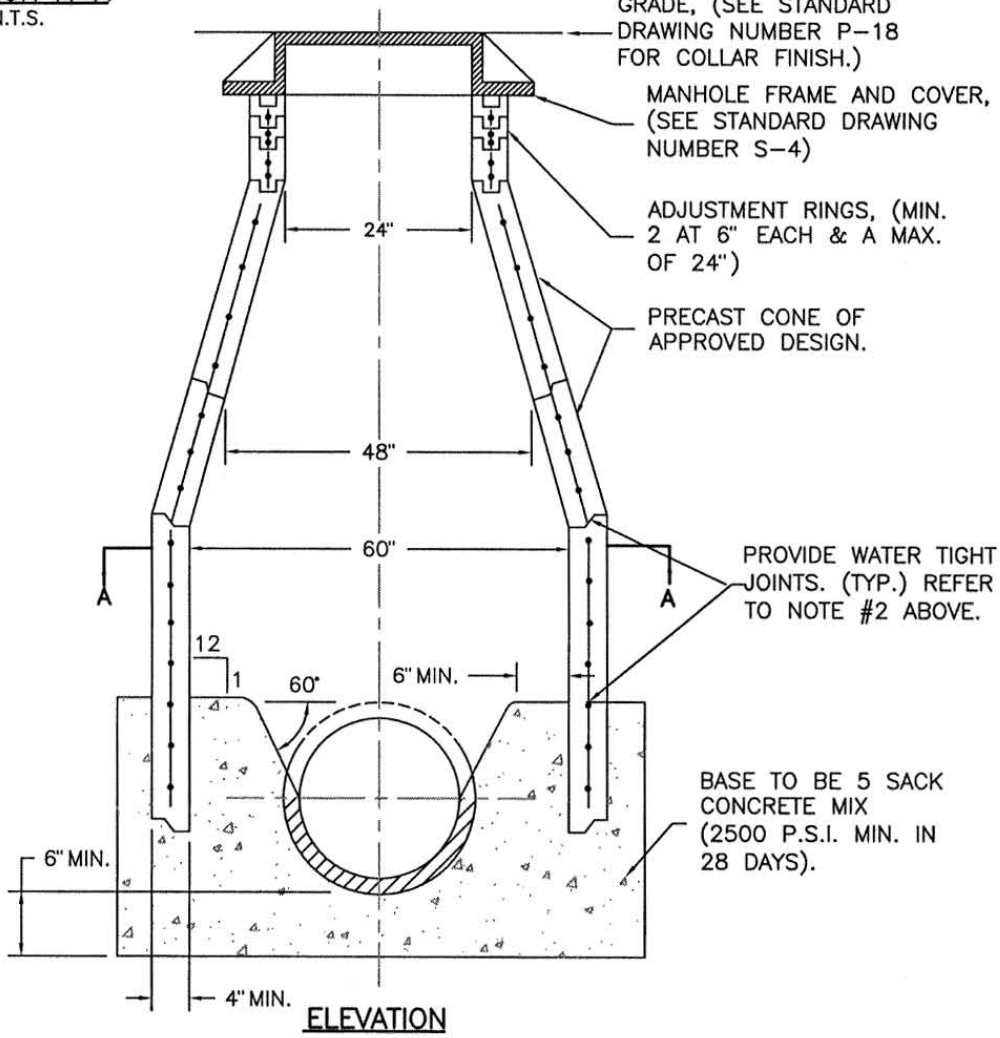

ELEVATION
N.T.S.

60" SEWER MANHOLE	Rev.	Date: 10/1/03 Harry A. Tow City Engineer	STD. NO. S-3

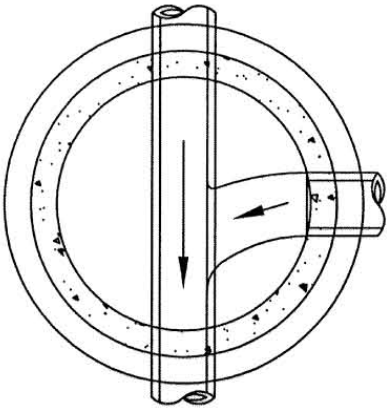

TYPE A

SIZE CHANGE IN MAIN

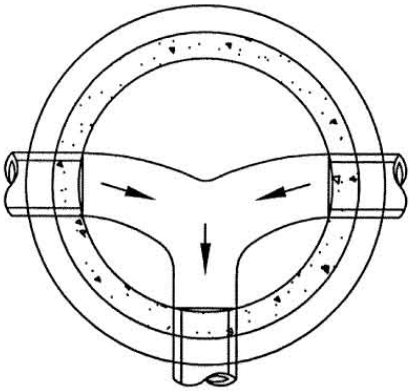

TYPE B

MAIN TERMINATING IN A MANHOLE

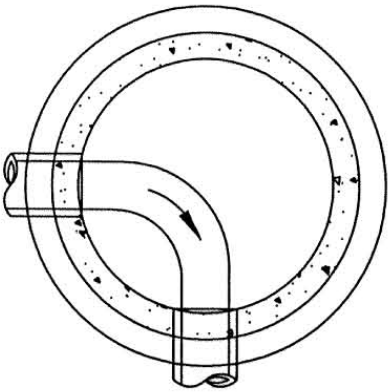

TYPE C

ALIGNMENT CHANGE IN THE MAIN

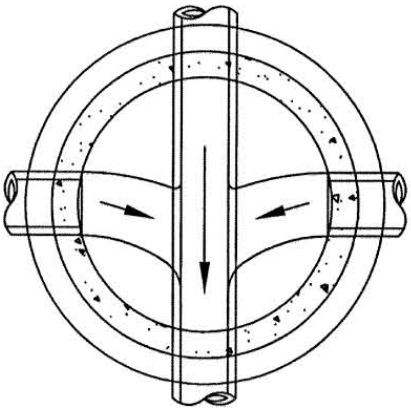

TYPE D

PIPE CONTINUOUS THROUGH MANHOLE

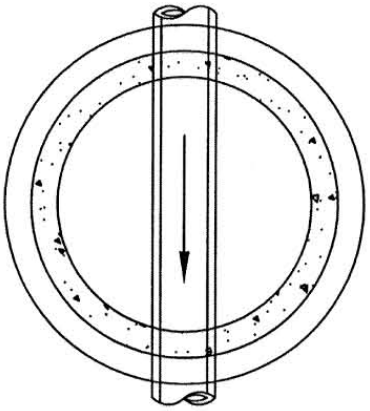

TYPE E

SAME ALIGNMENT THROUGH MANHOLE

NOTES

1. PIPE (C-900 OR SDR-35) THROUGH MANHOLE REQUIRES AN APPROVED WATER STOP.
2. TERMINATING PIPES EXTEND INTO MANHOLE A MAX. 1".
3. THE TOP HALF OF ALL PIPE WITHIN THE MANHOLE IS TO BE CUT AWAY. COVER THE CUT EDGES WITH MORTAR.
4. PREPARE A SMOOTH TROWELED CONCRETE CHANNEL HAVING UNIFORM GRADIENT BETWEEN PIPE INVERTS.
5. EXTEND THE CHANNEL WALLS UP TO SAME HEIGHT WITH TOP OF THE PIPE.
6. HAND TAMP 9" OF SAND OR APPROVED BACKFILL MATERIAL UNDER ALL PIPING COMING OUT OF THE MANHOLE UP TO THE FIRST JOINT.
7. THE BREADTH OF THE CHANNEL AT EACH JUNCTION MUST ALWAYS BE AS GREAT AS THE CHANNEL RADIUS OF THE CONNECTED PIPE.
8. SLOPE THE BENCHING UP TOWARDS THE MANHOLE WALL AS INDICATED IN THE MANHOLE SECTION. TROWEL THE SURFACE SMOOTH.
9. ON A STANDARD MANHOLE, INCOMING NON-STRAIGHT LINES SHALL HAVE AN INVERT THAT IS AT LEAST 1" HIGHER THAN THE OUT-GOING LINE, UNLESS OTHERWISE APPROVED.
10. MAXIMUM OF 3 INLET PIPES INTO MANHOLE.

FLOW CHANNELS FOR STANDARD SANITARY SEWER MANHOLES	Rev.	Date: 10/1/03 Harry A. Tow City Engineer	STD. NO. S-3A

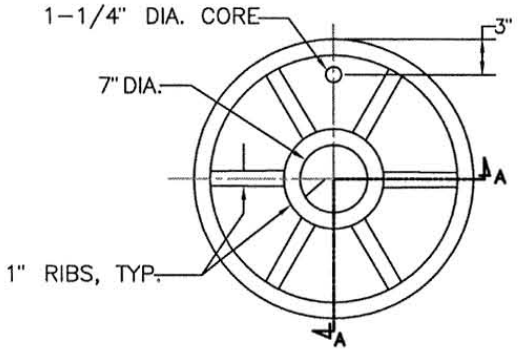

COVER-BOTTOM VIEW
N.T.S.

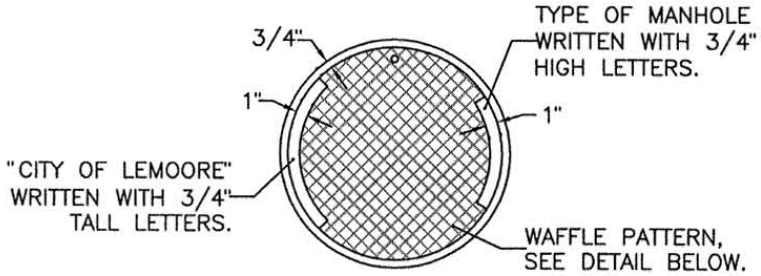

COVER-TOP VIEW
N.T.S.

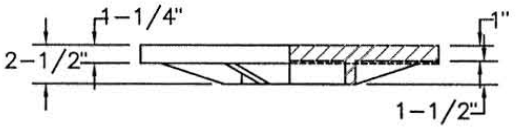

COVER-SIDE VIEW, SECTION A-A
N.T.S.

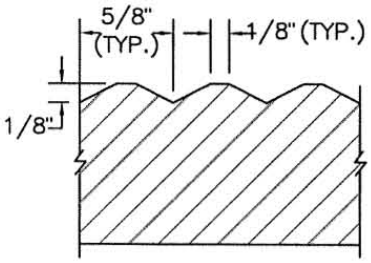

WAFFLE PATTERN DETAIL
N.T.S.

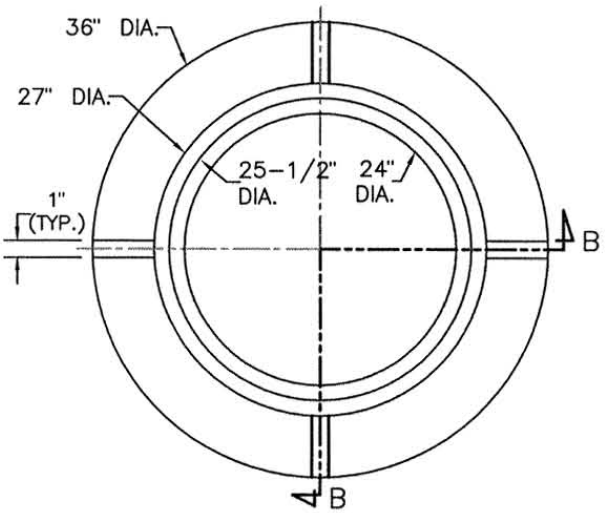

FRAME-TOP VIEW
N.T.S.

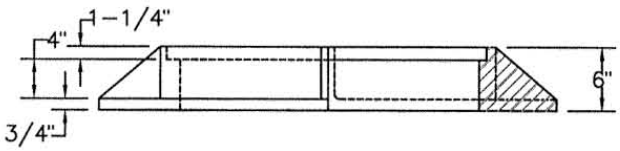

FRAME-SIDE VIEW, SECTION B-B
N.T.S.

MANHOLE FRAME & COVER	Rev.	Date: 10/1/03 City Engineer	STD. NO. S-4

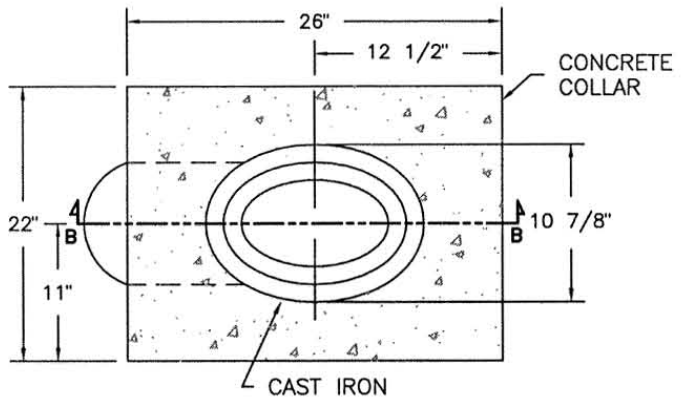

COVER–TOP VIEW
N.T.S.

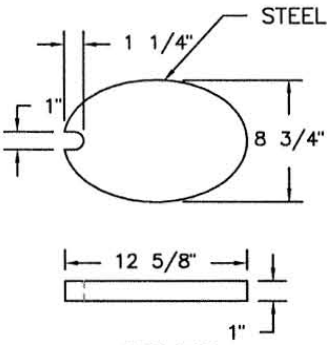

COVER
N.T.S.

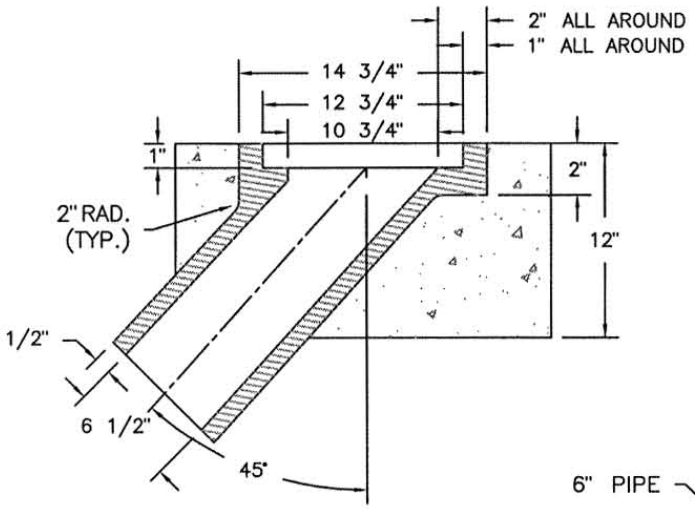

CLEANOUT–SECTION B–B
N.T.S.

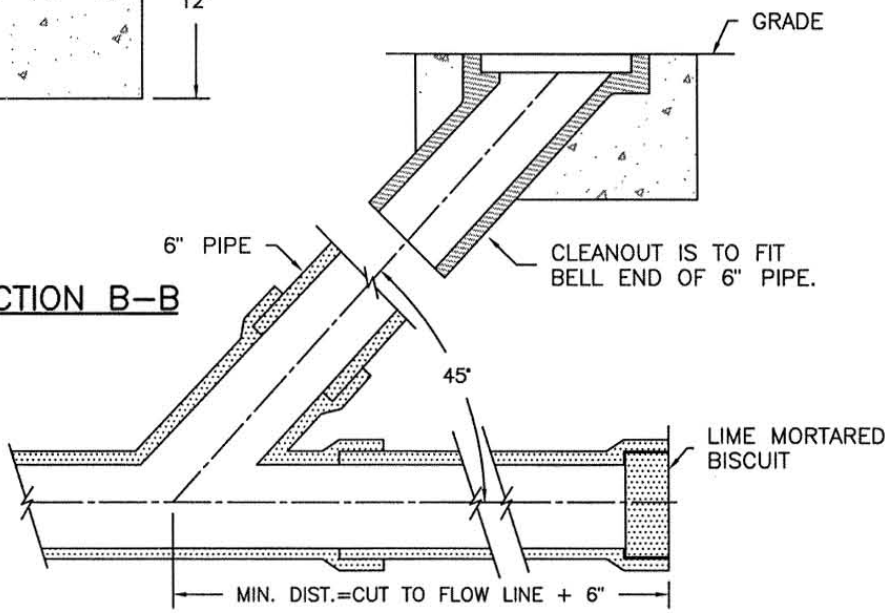

LAMPHOLE
N.T.S.

LAMPHOLE WITH CLEANOUT & COVER	Rev.	Date: 10/1/03 City Engineer	STD. NO. S-5

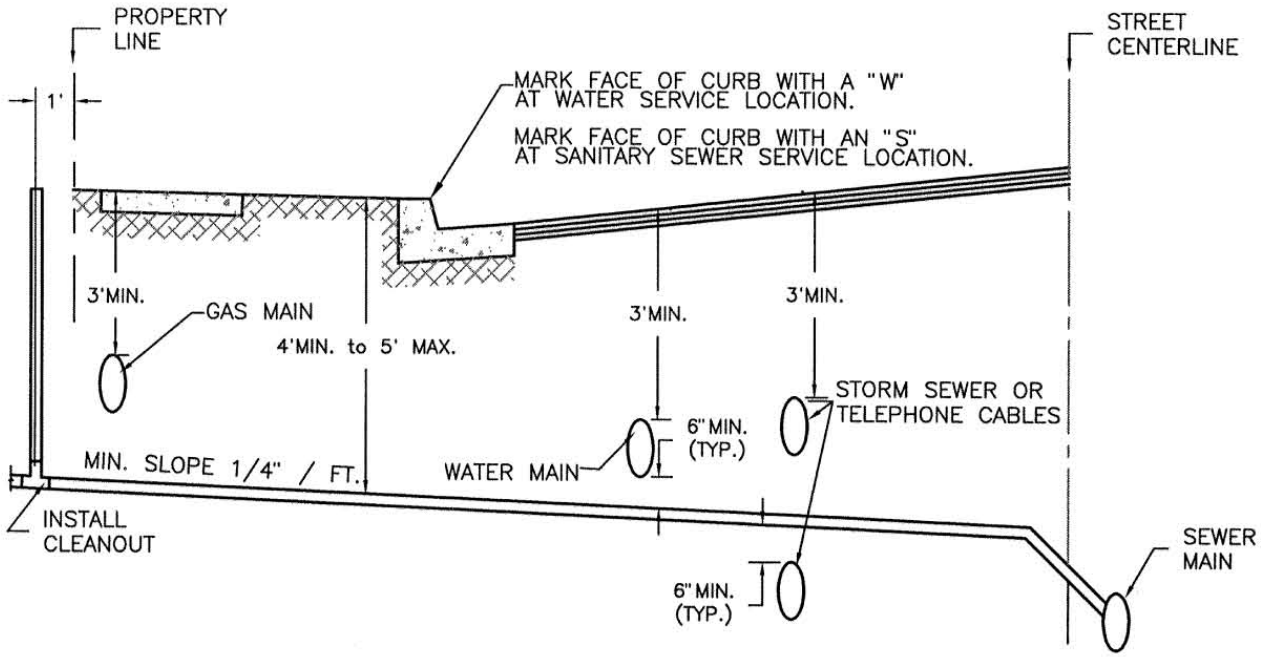

CASE I: SEWER LATERALS PRECEDE WATER & GAS MAINS

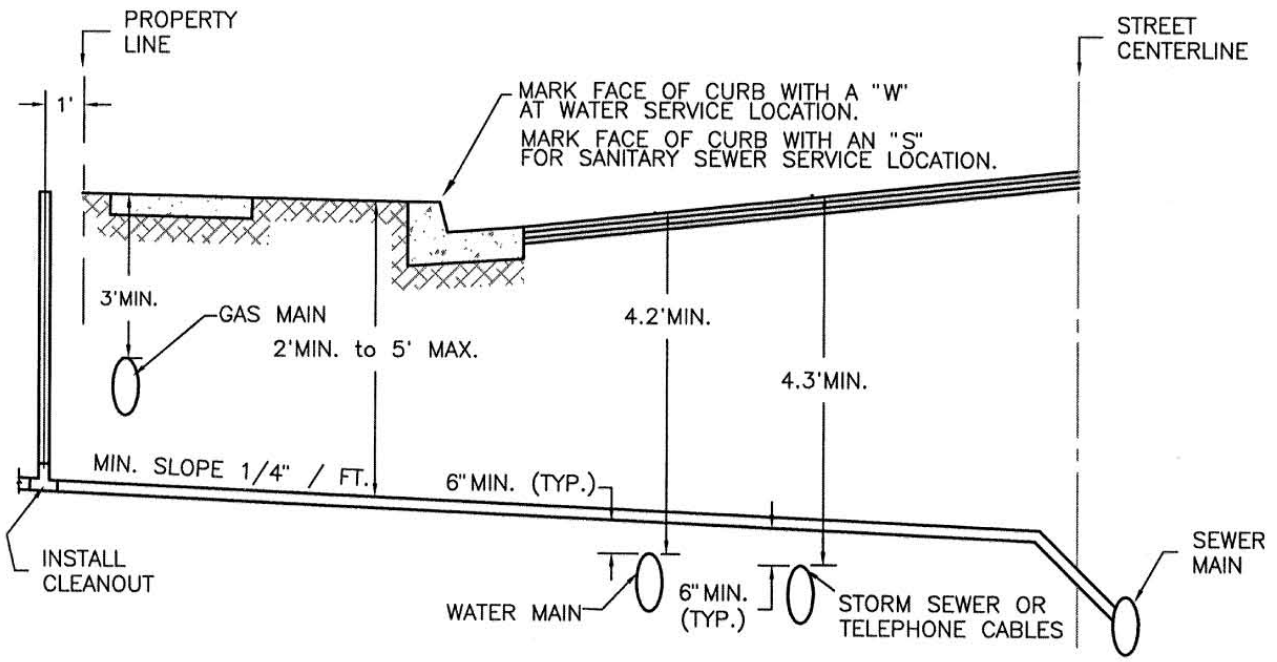

CASE II: WATER & GAS MAINS PRECEDE SEWER LATERALS

NOTE:

1. SEE STD. DWG. M-9 FOR LOCATION OF UTILITY LINES HORIZONTALLY IN THE STREET RIGHT-OF-WAY.
2. WATER SERVICES SHALL BE PLACED 2.0' FROM INTERIOR PROPERTY LINES.
3. SANITARY SEWER SERVICES SHALL BE PLACED CENTER OF LOT.
4. THERE SHALL BE A 10' MINIMUM SEPARATION BETWEEN WATER AND SANITARY SEWER MAINS AND SERVICES.
5. WHERE PRACTICAL, LOCATE UTILITY BOXES AT ALTERNATE LOT LINES FROM WATER METER BOXES AND AVOID CONFLICTS WITH DRIVEWAY LOCATIONS.

SEWER LATERALS	Rev.	Date: 10/1/03 Harry A. Tow City Engineer	STD. NO. S-6

NOTES:

1. LIFT STATION SHALL INCLUDE VALVE BOX AS SHOWN IN STD. NO. S-9.
2. DRAWINGS SHOW TYPICAL ARRANGEMENT OF EQUIPMENT. DETAILED DIMENSIONS SHALL BE PER MANUFACTURERS RECOMMENDATION AND AS APPROVED BY THE ENGINEER. DETAILED SHOP DRAWINGS ARE REQUIRED. SEE STANDARD SPECIFICATION FOR WET WELL LIFT STATIONS.
3. ALL ANCHOR BOLTS, NUTS, BOLTS AND OTHER HARDWARE USED ON OR WITHIN WET WELL SHALL BE STAINLESS STEEL.
4. FOR COATINGS REQUIREMENTS, SEE STANDARD SPECIFICATION SECTION 31, PAINTING.

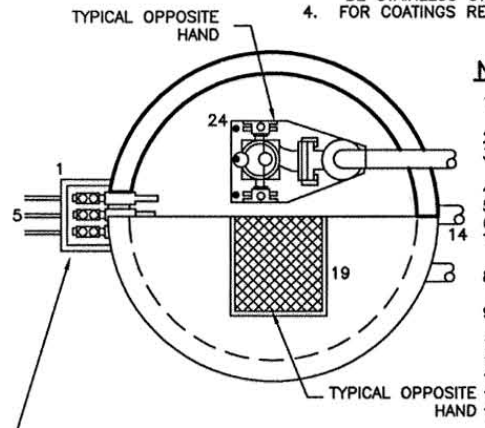

NO.	ITEM
1.	18"X24" PRECAST PULL BOX W/TRAFFIC COVER
2.	24" DEEP GRAVEL SUMP BELOW PULL BOX
3.	CONDUIT SEAL, RIGID STEEL NIPPLE AND BUSHING (GAS TIGHT)
4.	STAINLESS STEEL SLIDE RAILS
5.	RIGID CONDUIT TO CONTROLLER
6.	INFLUENT PIPING
7.	SLIDE RAIL BRACE, MOUNT AT MID HEIGHT, (St. Stl.)
8.	STEEL PER SUBMITTED CALCS., MIN. #5 BARS @ 8" O.C. EA. WAY
9.	LOCKING HASP FOR PADLOCK (FLUSH MOUNTED)
10.	STAINLESS STEEL LIFTING CABLE OR CHAIN
11.	SUBMERSIBLE PUMPS AS REQ'D, FLYGT
12.	HYDRAULICALLY SEALED DISCHARGE FLANGE
13.	RESTRAINED FLEXIBLE COUPLING
14.	3" DRAIN PIPE FROM VALVE BOX
15.	3"NPT CHECK VALVE (St. Stl.)
16.	D.I.P. DISCHARGE TO VALVE BOX
17.	BRASS LUGS & BRONZE CLAMP RING
18.	VERTICAL DISCHARGE PUMPS REQUIRE THIS ALTERNATE ARRANGEMENT.
19.	LOCKABLE HINGED ALUM. DOOR, W/ DROP HANDLE, W/OPENING TO ACCOMODATE PUMP REMOVAL (MIN SIZE 36"X48")
20.	MOUNTING BRACKET PROVIDED BY MULTITRODE MFG.
21.	6' I.D. MIN. SIZE WET WELL. ASTM C-76, CLASS III RCP (SUBMIT CALCS FOR WET WELL SIZING & TOP COVER DESIGN)
22.	SLIDE RAIL BRACES, MOUNT AT MID HEIGHT (St. Stl.)
23.	PUMP CARRIER W/NON-SPARK BRASS GUIDES
24.	1/2" DIA. S.STEEL ANCHOR BOLTS. (8 TYP)
25.	ANGLE & U-BOLT BRACING
26.	REDUCER AS REQIRED
27.	SQUARE FOOTING AS REQUIRED
28.	CONTROL AND POWER WIRING SHALL PASS THROUGH SEPARATE SEALED CONDUITS TO PULL BOX.
29.	GROUT ALL AROUND INTERIOR OF WET WELL. SLOPE AT 1:1 MIN.
30.	PROVIDE AN APPROVED MOISTURE SEALANT AROUND EXTERIOR OF WET WELL.

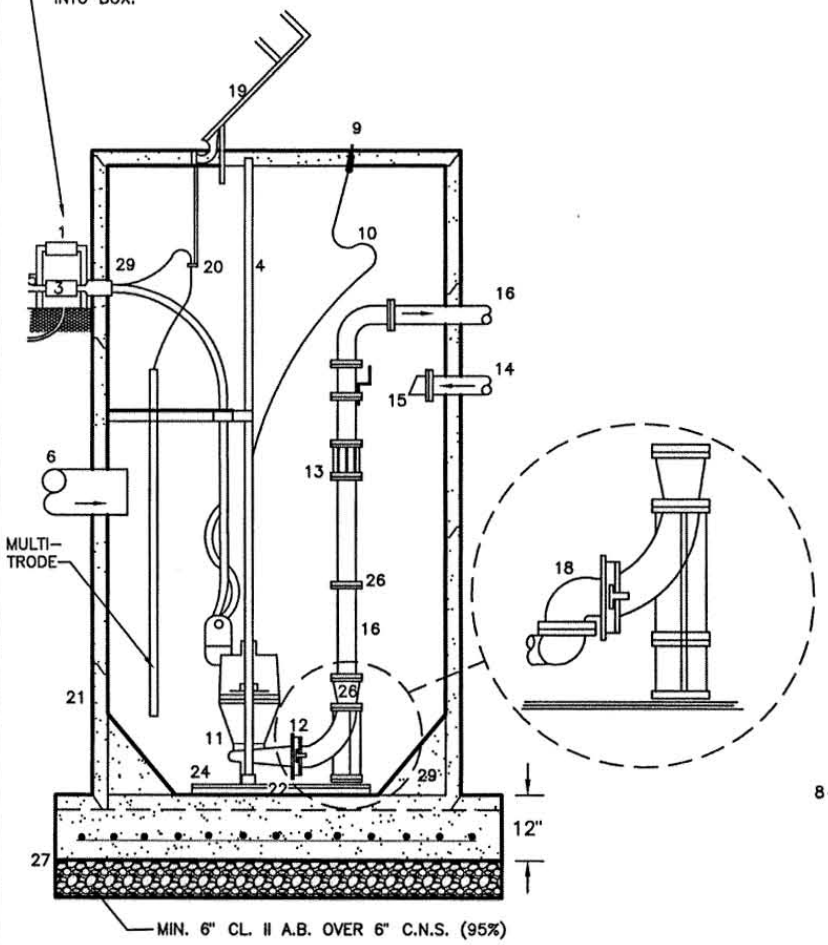

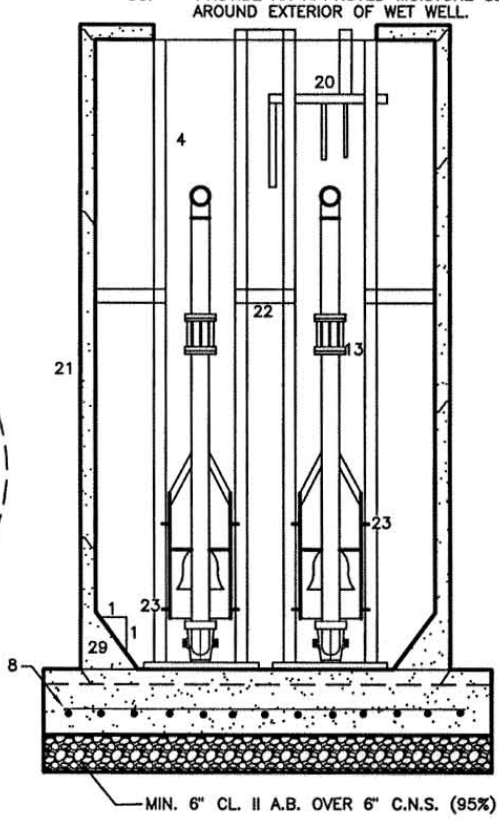

NOTE:

DRAWING IS SCHEMATIC; DIMENSIONS, ELEVATIONS & OTHER SPECIFICATIONS SHALL BE PER SUBMITTAL.

SANITARY SEWER LIFT STATION	Rev.	Date: 10/1/03 Larry A. Tow City Engineer	STD. NO. S-8

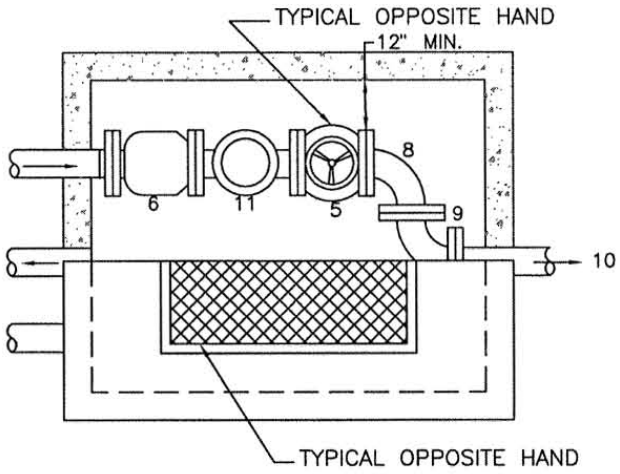

NO.	ITEM
1.	LOCKABLE ALUMINUM DOOR, W/ DROP HANDLE, NOMINAL OPENING 36"x 30" MIN.
2.	LOCKING HASP FOR PADLOCK (FLUSH MOUNTED).
3.	3" DRAIN PIPE TO WET WELL.
4.	PIPE SUPPORTS AS REQUIRED (SUBMIT DETAILS).
5.	PLUG.
6.	CHECK VALVE, SWING TYPE, LEVER & WEIGHT OPERATED.
7.	0"–6" DEPENDING ON LOCATION.
8.	CAST IRON ELBOW.
9.	CAST IRON TEE.
10.	DUCTILE IRON PIPE TO EXTEND A MIN. OF 24" BEYOND OUTSIDE WALL OF VAULT.
11.	TEE WITH BLANK FLANGE FOR PORTABLE PUMP HOOK–UP.

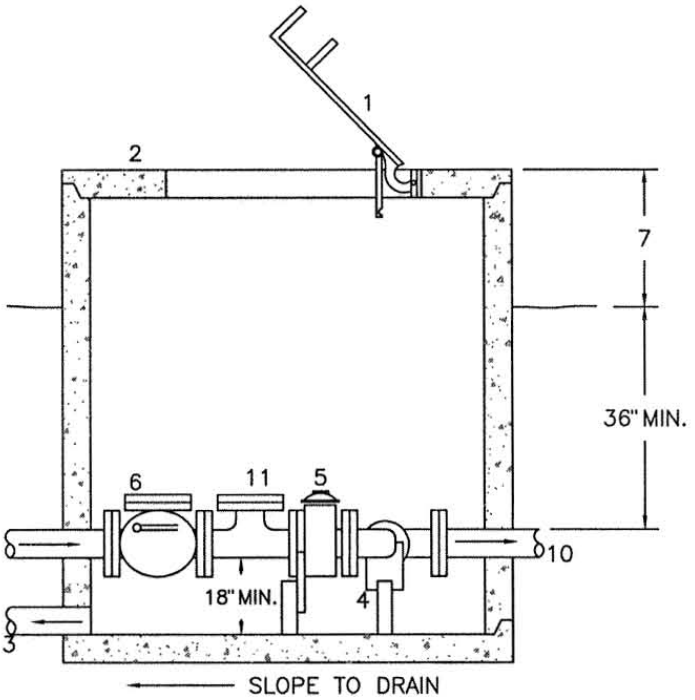

NOTES:

1. VALVE BOX FOR 8" FITTINGS SHALL BE A NOMINAL 5'–0"x 8'–0" PRECAST CONCRETE VAULT, QUICKSET SERIES 450 OR APPROVED EQUAL, WITH LOCKABLE HINGED ALUMINUM DOORS (ALL JOINTS WATERTIGHT).
   VALVE BOX FOR 10" FITTINGS SHALL BE A NOMINAL 6'–0"x 9'–0" PRECAST CONCRETE VAULT, QUICKSET OR APPROVED EQUAL, WITH LOCKABLE HINGED ALUMINUM DOORS (ALL JOINTS WATERTIGHT).
   VALVE BOX FOR 12" FITTINGS SHALL BE A NOMINAL 7'–0"x 10'–0" PRECAST CONCRETE VAULT, QUICKSET OR APPROVED EQUAL, WITH LOCKABLE HINGED ALUMINUM DOORS (ALL JOINTS WATERTIGHT).
2. DRAWINGS SHOW TYPICAL ARRANGEMENT OF EQUIPMENT. DETAILED DIMENSIONS SHALL BE PER MANUFACTURER'S RECOMMENDATION AND AS APPROVED BY THE ENGINEER. DETAILED SHOP DRAWINGS ARE REQUIRED.
3. SEE SECTION 31 OF THE STANDARD SPECIFICATIONS FOR PAINTING AND FOR REQUIRED COATINGS.
4. ALL FITTINGS WITHIN VAULT TO BE FLANGED CONNECTIONS, SIZE AS REQUIRED, WITH CEMENT MORTAR LINING.

LIFT STATION VALVE BOX	Rev.	Date: 10/1/03 City Engineer	STD. NO. S-9

NOTES:

1. LIFT STATION SHALL INCLUDE VALVE BOX AS SHOWN IN STD. NO. S-9.
2. DRAWINGS SHOW TYPICAL ARRANGEMENT OF EQUIPMENT. DETAILED DIMENSIONS SHALL BE PER MANUFACTURERS RECOMMENDATION AND AS APPROVED BY THE ENGINEER. DETAILED SHOP DRAWINGS ARE REQUIRED. SEE STANDARD SPECIFICATION FOR WET WELL LIFT STATIONS.
3. ALL ANCHOR BOLTS, NUTS, BOLTS AND OTHER HARDWARE USED ON OR WITHIN WET WELL SHALL BE STAINLESS STEEL.
4. FOR COATINGS REQUIREMENTS, SEE STANDARD SPECIFICATION SECTION 31, PAINTING.

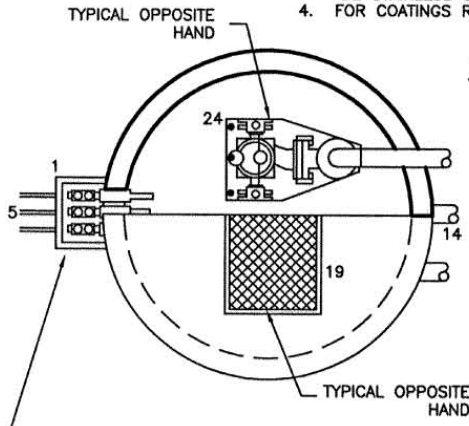

NO.	ITEM
1.	18"X24" PRECAST PULL BOX W/TRAFFIC COVER
2.	24" DEEP GRAVEL SUMP BELOW PULL BOX
3.	CONDUIT SEAL, RIGID STEEL NIPPLE AND BUSHING (GAS TIGHT)
4.	STAINLESS STEEL SLIDE RAILS
5.	RIGID CONDUIT TO CONTROLLER
6.	INFLUENT PIPING
7.	SLIDE RAIL BRACE, MOUNT AT MID HEIGHT, (St. Stl.)
8.	STEEL PER SUBMITTED CALCS., MIN. #5 BARS @ 8" O.C. EA. WAY
9.	LOCKING HASP FOR PADLOCK (FLUSH MOUNTED)
10.	STAINLESS STEEL LIFTING CABLE OR CHAIN
11.	SUBMERSIBLE PUMPS AS REQ'D, FLYGT
12.	HYDRAULICALLY SEALED DISCHARGE FLANGE
13.	RESTRAINED FLEXIBLE COUPLING
14.	3" DRAIN PIPE FROM VALVE BOX
15.	3"NPT CHECK VALVE (St. Stl.)
16.	D.I.P. DISCHARGE TO VALVE BOX
17.	BRASS LUGS & BRONZE CLAMP RING
18.	VERTICAL DISCHARGE PUMPS REQUIRE THIS ALTERNATE ARRANGEMENT.
19.	LOCKABLE HINGED ALUM. DOOR, W/ DROP HANDLE, W/OPENING TO ACCOMODATE PUMP REMOVAL (MIN SIZE 36"X48")
20.	MOUNTING BRACKET PROVIDED BY MULTITRODE MFG.
21.	6' I.D. MIN. SIZE WET WELL. ASTM C-76, CLASS III RCP (SUBMIT CALCS FOR WET WELL SIZING & TOP COVER DESIGN)
22.	SLIDE RAIL BRACES, MOUNT AT MID HEIGHT (St. Stl.)
23.	PUMP CARRIER W/NON-SPARK BRASS GUIDES
24.	1/2"DIA. S.STEEL ANCHOR BOLTS. (8 TYP)
25.	ANGLE & U-BOLT BRACING
26.	REDUCER AS REQIRED
27.	SQUARE FOOTING AS REQUIRED
28.	CONTROL AND POWER WIRING SHALL PASS THROUGH SEPARATE SEALED CONDUITS TO PULL BOX.
29.	GROUT ALL AROUND INTERIOR OF WET WELL. SLOPE AT 1:1 MIN.
30.	PROVIDE AN APPROVED MOISTURE SEALANT AROUND EXTERIOR OF WET WELL.

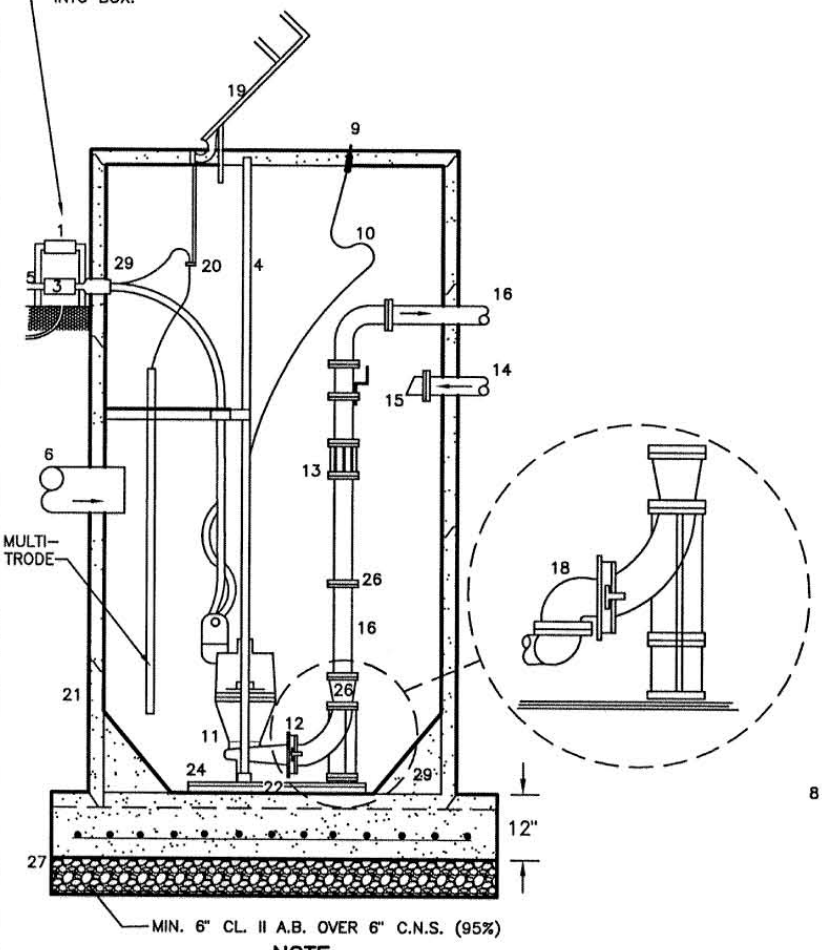

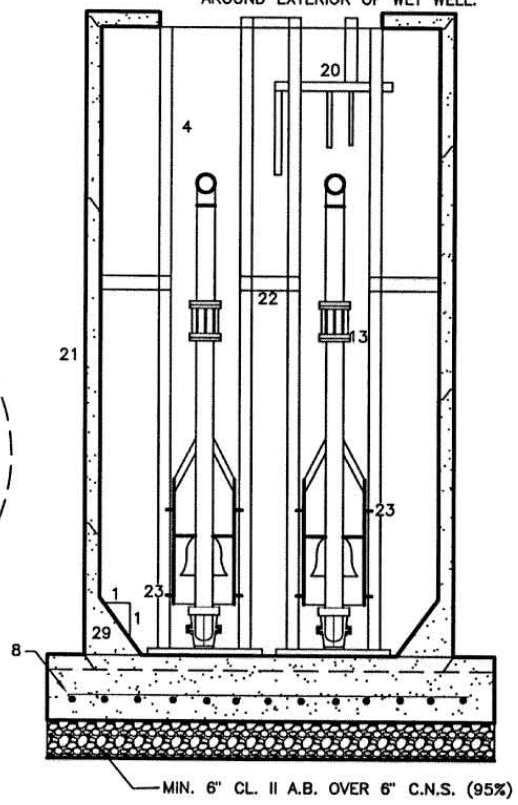

NOTE:

DRAWING IS SCHEMATIC; DIMENSIONS, ELEVATIONS & OTHER SPECIFICATIONS SHALL BE PER SUBMITTAL.

STORM SEWER LIFT STATION	Rev.	Date: 10/1/03 Harry A. Tow City Engineer	STD. NO. S-10

DROP MANHOLE CONNECTIONS

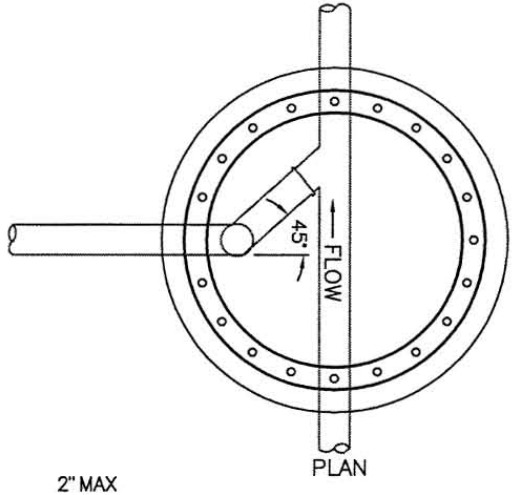

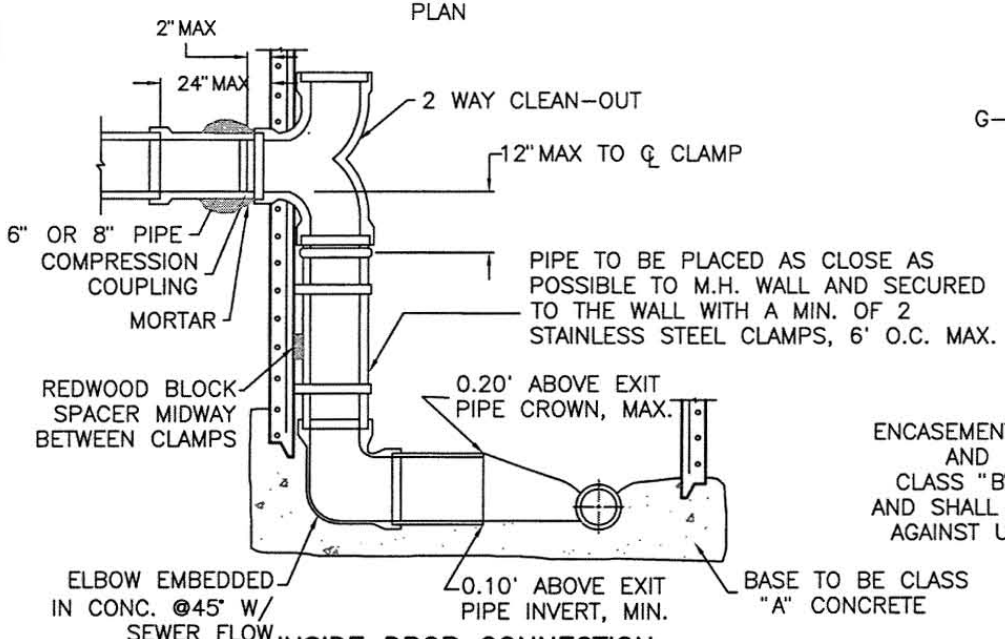

INSIDE DROP CONNECTION (8" SEWER MAX.)

N.T.S.

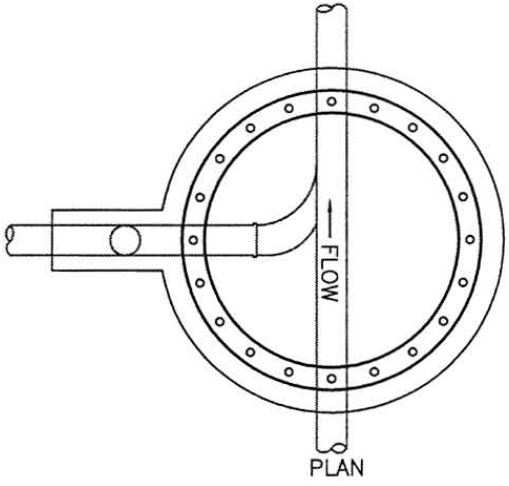

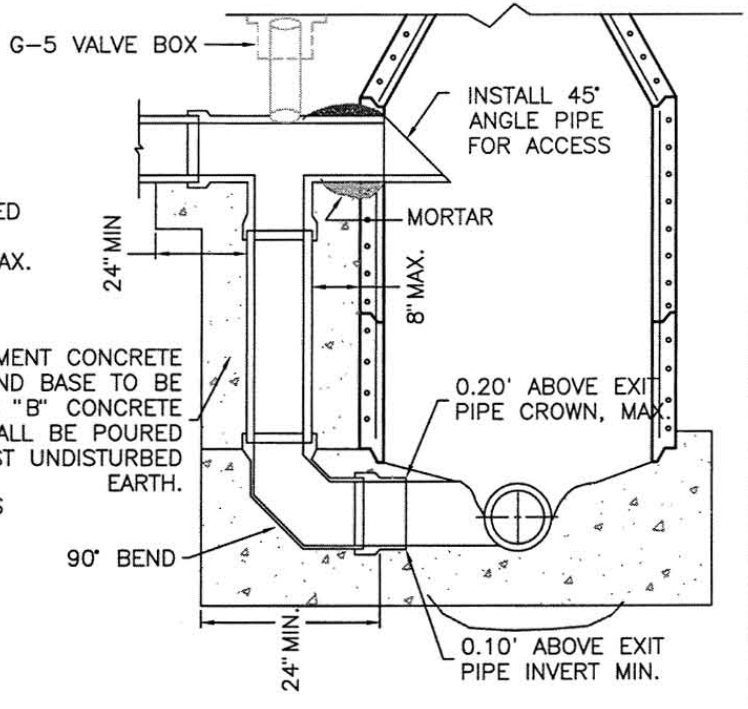

OUTSIDE DROP CONNECTION (10" SEWER AND LARGER)

N.T.S.

NOTES:

1. ALL INSIDE DROP PIPING TO BE PVC OR ABS.
2. CEMENT ALL JOINTS.
3. DROP CONNECTION PIPE AND FITTINGS TO BE SAME AS ENTERING PIPE.
4. CLAMPS TO BE 1 1/2" X 12 GAUGE STAINLESS STEEL, ANCHORED TO MH WALL WITH TWO 1/2" CADMIUM PLATED BOLTS.
5. SEE STD. DWG. NO'S S-1, S-2, & S-3 FOR MANHOLE CONSTRUCTION.

Rev.

Date: 10/1/03

City Engineer

STD. NO. S-11

NOTES:

THIS DETAIL MAY BE USED ONLY FOR STORM DRAINAGE. NOT ACCEPTABLE FOR SANITARY SEWER.

1. LIFT STATION SHALL INCLUDE VALVE BOX AS SHOWN IN STD. NO. S–9.
2. DRAWINGS SHOW TYPICAL ARRANGEMENT OF EQUIPMENT. DETAILED DIMENSIONS SHALL BE PER MANUFACTURER'S RECOMMENDATION AND AS APPROVED BY THE ENGINEER. DETAILED SHOP DRAWINGS ARE REQUIRED.
3. ALL ANCHOR BOLTS, NUTS, BOLTS AND OTHER HARDWARE USED ON OR WITHIN WET WELL SHALL BE STAINLESS STEEL.
4. FOR COATING REQUIREMENTS, SEE SECTION 31 OF THE STANDARD SPECIFICATIONS.
5. DRAWING IS SCHEMATIC; DIMENSIONS, ELEVATIONS, AND OTHER SPECIFICATIONS SHALL BE PER SUBMITTAL.

NO.	ITEM
1.	18"X24" PRECAST PULL
2.	24" DEEP GRAVEL SUMP BELOW PULL BOX
3.	CONDUIT SEAL, RIGID STEEL NIPPLE AND BUSHING (GAS TIGHT)
5.	RIGID CONDUIT TO CONTROLLER
6.	INFLUENT PIPING
7.	STEEL PER SUBMITTED CALCS., MIN. #5 BARS @8" O.C. EA. WAY
8.	ALARM LEVEL ELEVATION
9.	TURN–ON, TWO PUMPS
10.	TURN–ON, ONE PUMP
11.	TURN–OFF, BOTH PUMPS
12.	SEALED MERCURY SWITCH (4 TYP.)
14.	3" DRAIN PIPE FROM VALVE BOX
15.	D.I.P. DISCHARGE TO VALVE BOX
16.	3" PVC VENT PIPING
17.	WIRING BRACKET WITH RUBBER GROMMETS IN STAINLESS STEEL HANGERS
18.	8' I.D., MIN. SIZE WET WELL, ASTM C–76, CLASS III R.C.P. (SUBMIT CALCS FOR WET WELL SIZING & TOP COVER DESIGN)
19.	SQUARE FOOTING AS REQUIRED
20.	CONTROL AND POWER WIRING SHALL PASS THROUGH SEPARATE SEALED CONDUITS TO PULL BOX.
21.	24" MANHOLE OPENING

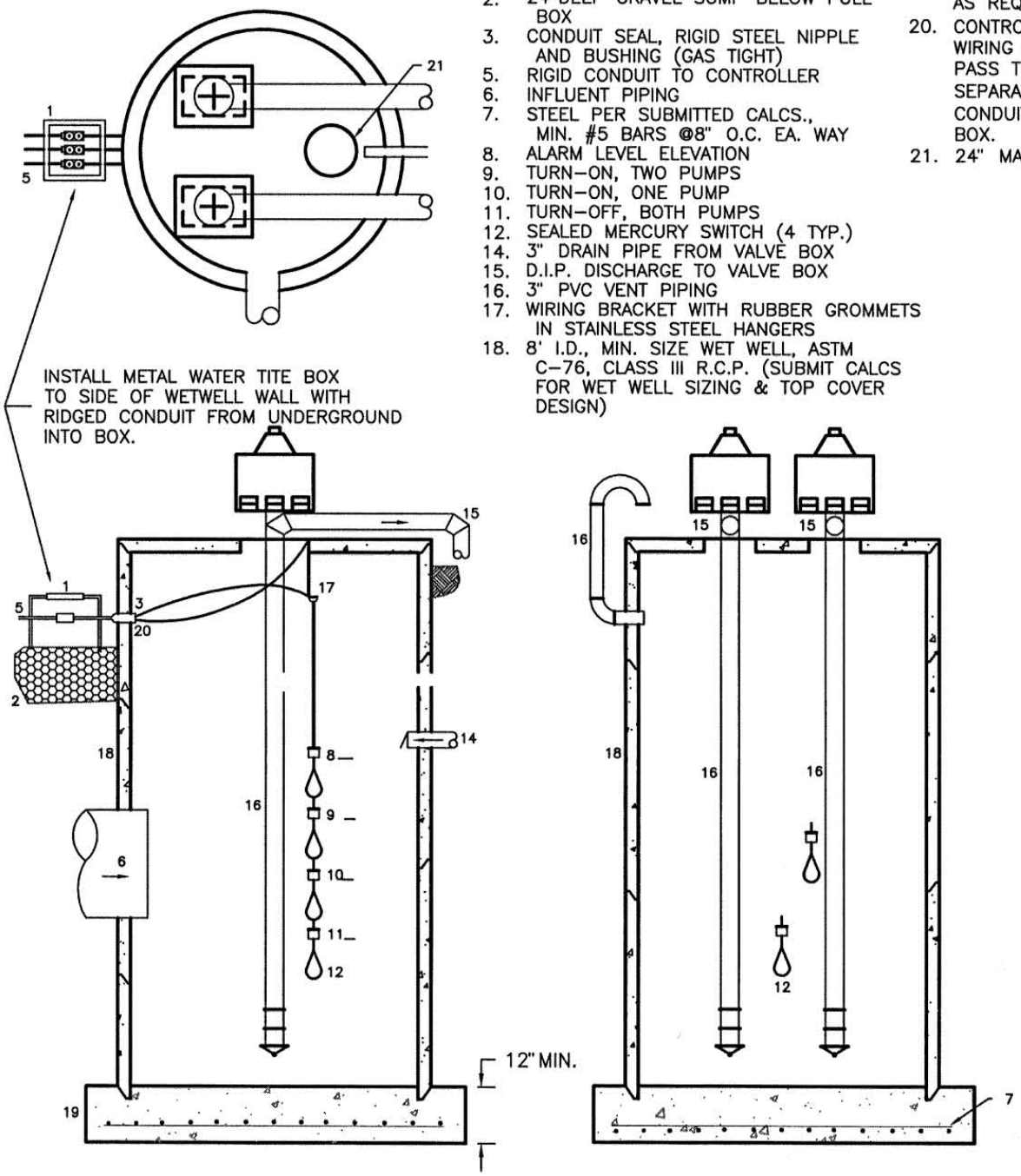

PROPELLER PUMP LIFT STATION	Rev.	Date: 10/1/03 City Engineer	STD. NO. S-12

1" WATER SERVICE

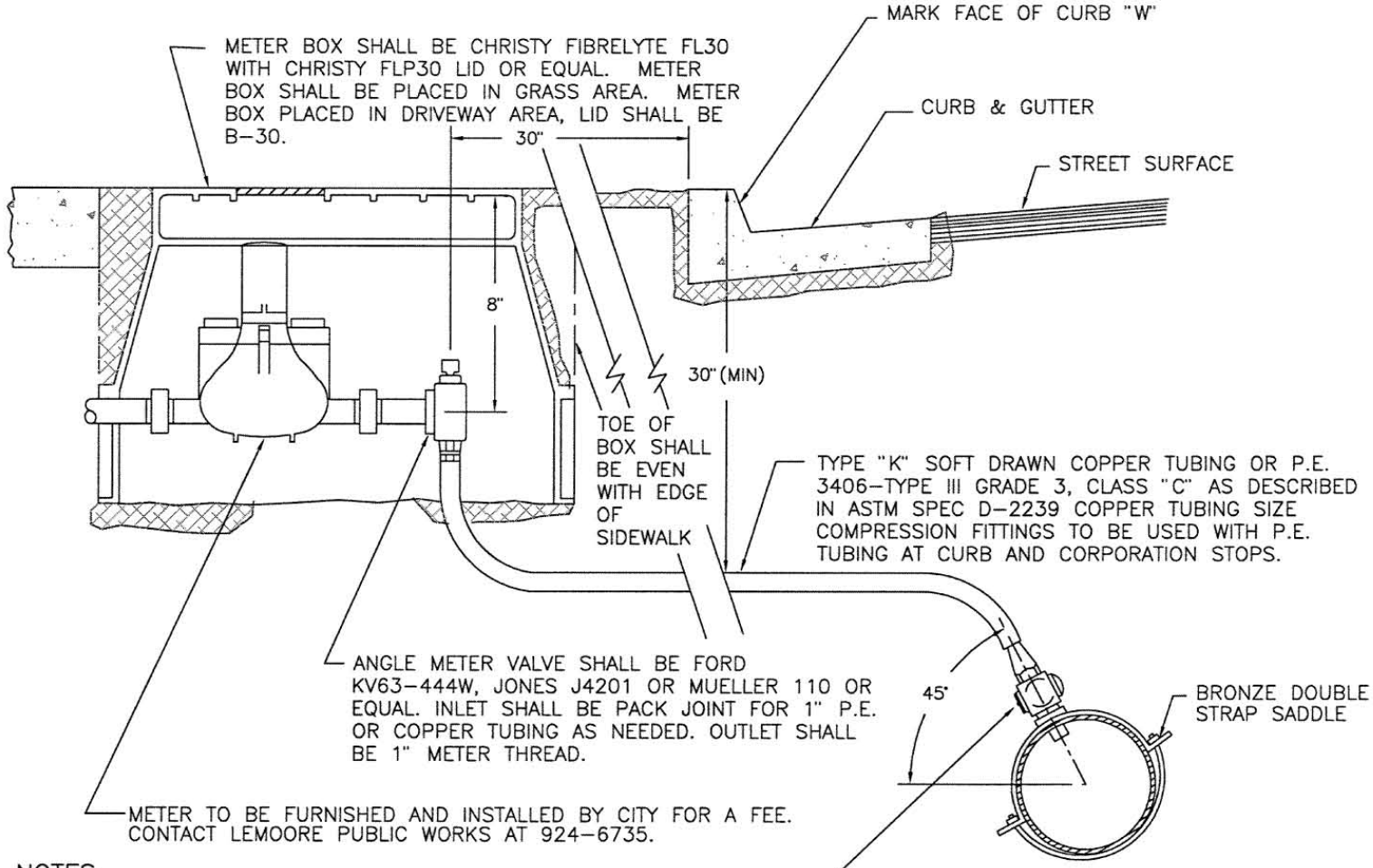

NOTES:

1. FOR ALL SIZES OF WATER MAINS USE FORD, JONES, MUELLER OR EQUAL DOUBLE STRAP SADDLES FOR THEIR RESPECTIVE PIPE SIZE, TYPE, AND PRESSURE.
2. SADDLES, STRAPS AND NUTS SHALL BE SOLID BRONZE.

Rev.

Date: 10/1/03

City Engineer

STD. NO. W-1

2" WATER SERVICE

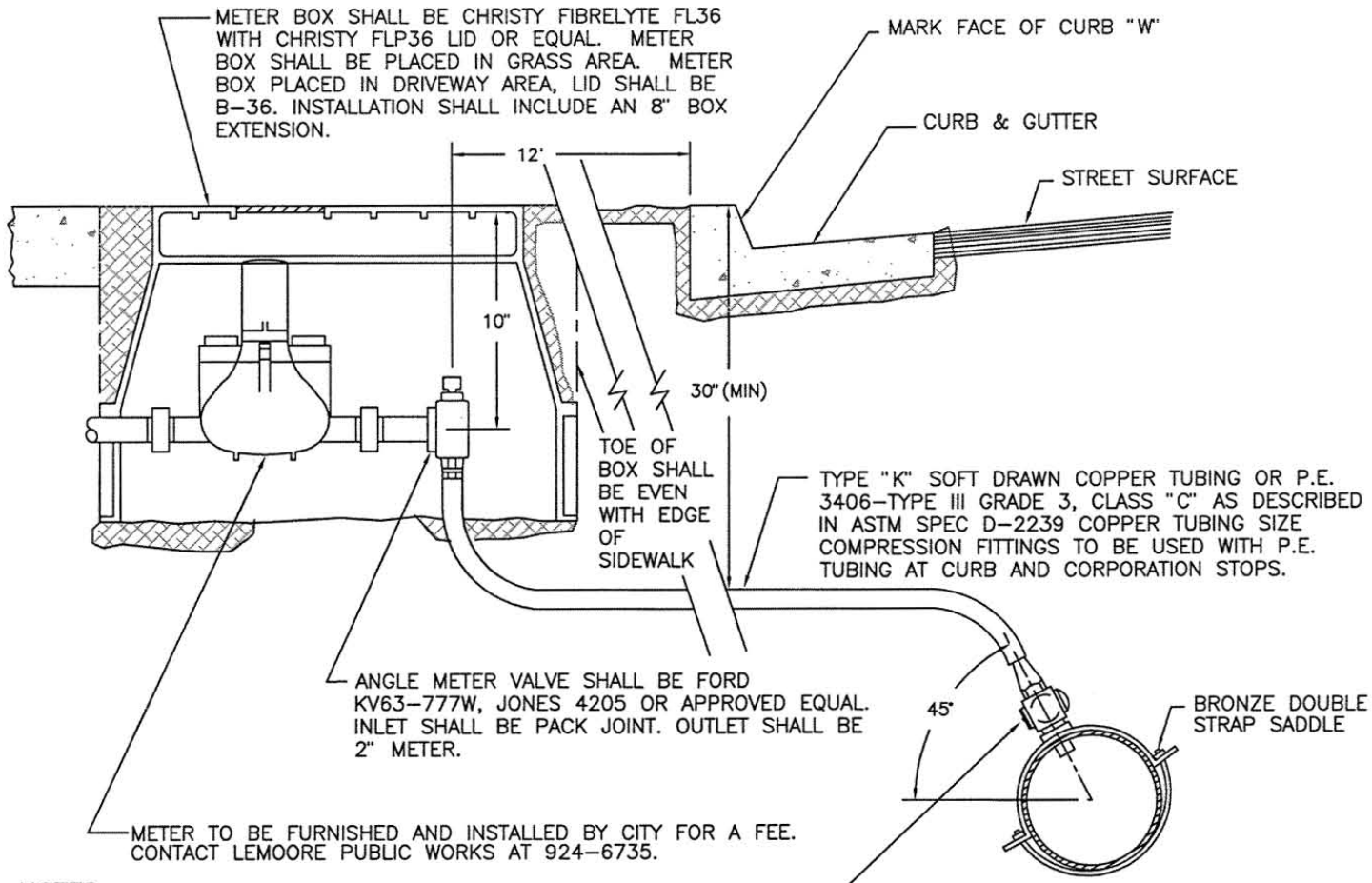

NOTES:

1. FOR ALL SIZES OF WATER MAINS USE FORD, JONES, MUELLER OR EQUAL DOUBLE STRAP SADDLES FOR THEIR RESPECTIVE PIPE SIZE, TYPE, AND PRESSURE.
2. SADDLES, STRAPS AND NUTS SHALL BE SOLID BRONZE.
3. INSTALL P.V.C. WATER LINE TO 12' BACK OF CURB STOP.

Rev.

Date: 10/1/03

City Engineer

STD. NO. W-2

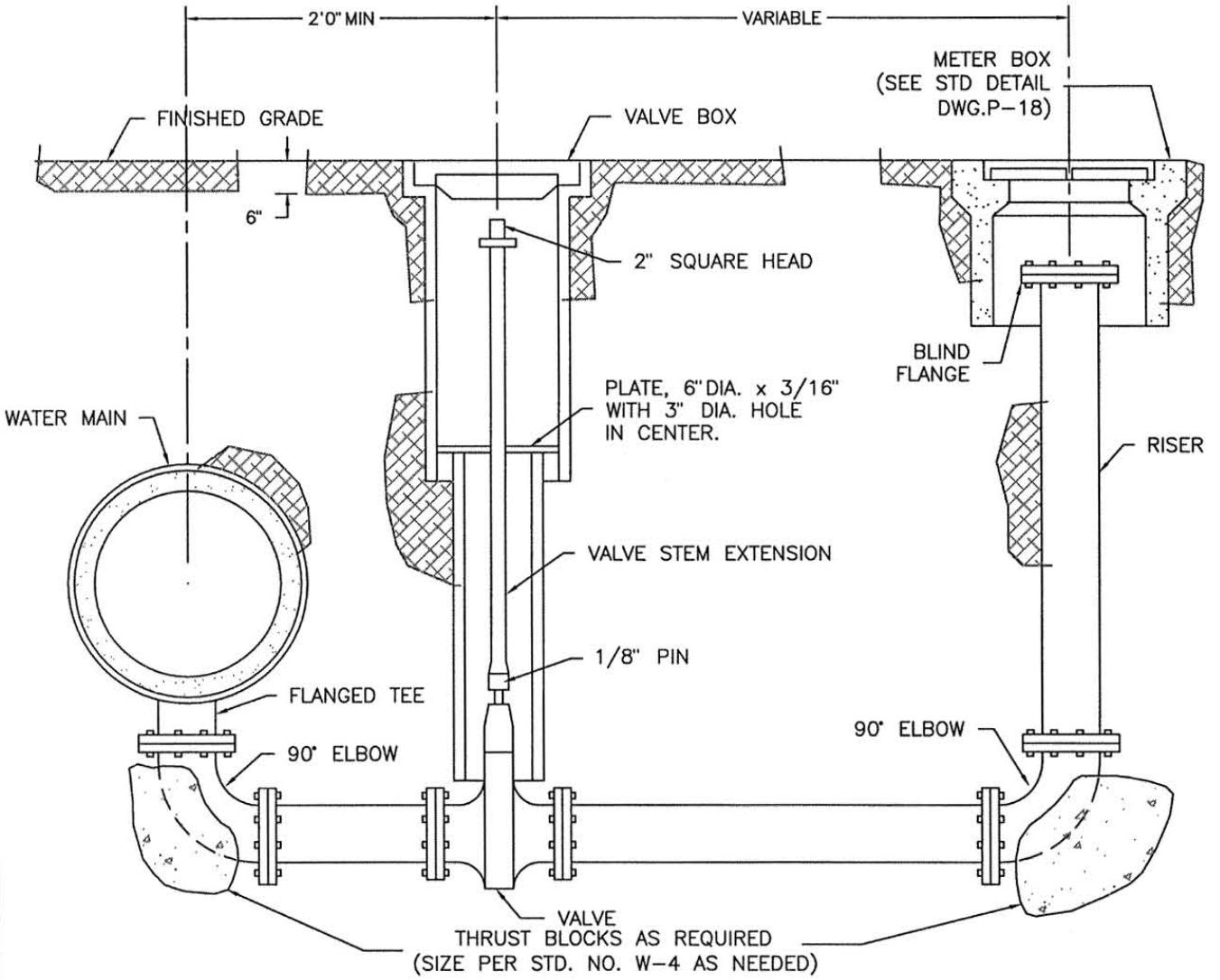

BLOW-OFF SCHEDULE	
MAIN SIZE	BLOW-OFF SIZE
6"	4"
8"	4"
10"	4"
12"	6"
14"	6"
16"	8"

NOTES:

1. ALL FITTINGS SHALL BE SECURED WITH RETAINING GLANDS OR TIE-RODS WHERE APPLICABLE.
2. STEEL PIPE SHALL BE WRAPPED PER THE STANDARD SPECIFICATION FOR STEEL WATER PIPE.
3. VALVE AND METER BOXES SHALL BE FINISHED TO GRADE PER STANDARD DRAWING NO. S-7.

PERMANENT BLOW-OFF	Rev.	Date: 10/1/03 Gary A. Tow City Engineer	STD. NO. W-3

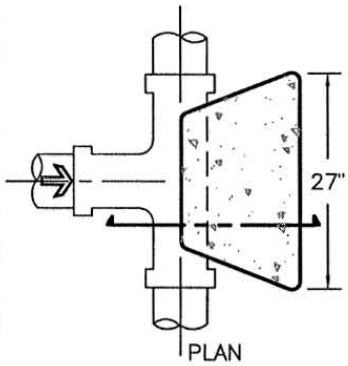

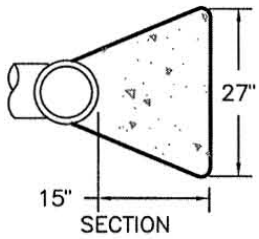

TEES
N.T.S.

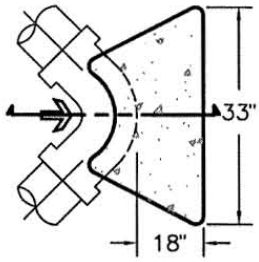

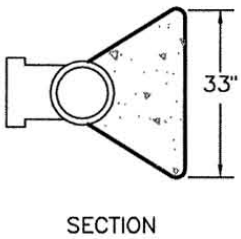

90°BEND
N.T.S.

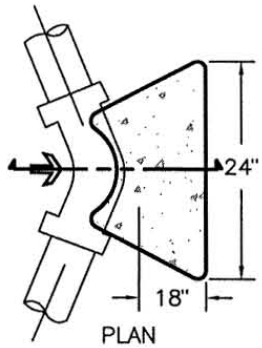

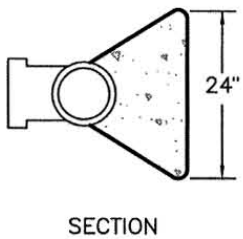

45°BEND
N.T.S.

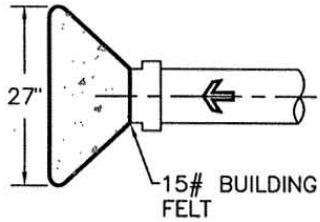

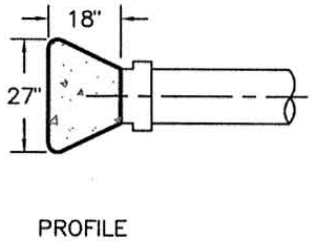

PLUG
N.T.S.

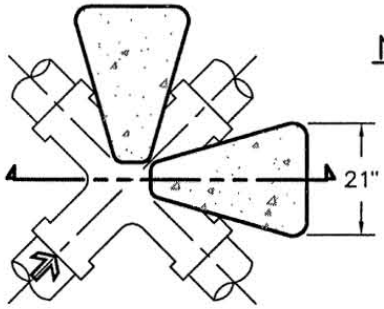

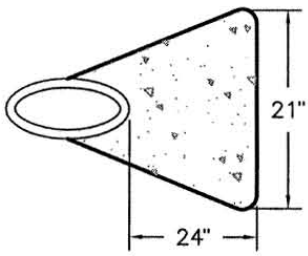

CROSSES
N.T.S.

NOTES:

1. CAST ALL THRUST BLOCKS AGAINST UNDISTURBED SOIL. THE MINIMUM THICKNESS BETWEEN FITTING AND SOIL SHALL BE 12".
2. ALL THRUST BLOCK DIMENSIONS SHOWN ARE FOR AN 8" PIPE OR SMALLER. SEE W-4A AND W-4B FOR 10" AND 12" PIPE. LARGER DIAMETERS OF PIPE REQUIRE DESIGN OF THRUST BLOCKS AND SUBMITTAL TO CITY ENGINEER FOR APPROVAL ASSUMING SOIL BEARING =1000 PSF & PRESSURE=100 PSI
3. CONCRETE SHALL BE CLASS "B" PER SECTION 7 OF THE STANDARD SPECIFICATIONS.
4. ⇨ INDICATES THRUST DIRECTION. WHERE THRUST DIRECTION DIFFERS, ALTERNATE THRUST BLOCK DESIGN WILL BE REQUIRED.
5. PROJECT ENGINEER MAY SUBMIT SOILS REPORT AND CALCULATIONS TO JUSTIFY LESSER THRUST BLOCKS. USE 150 PSI FOR DESIGN.
6. RESTRAINED JOINTS MAY BE USED IN LIEU OF THRUST BLOCKS. SUBMIT TO CITY PRIOR TO CONSTRUCTION.
7. NTS=NOT TO SCALE

THRUST BLOCKS 8" PIPE	Rev.	Date: 10/1/03 Larry A. Tow City Engineer	STD. NO. W-4

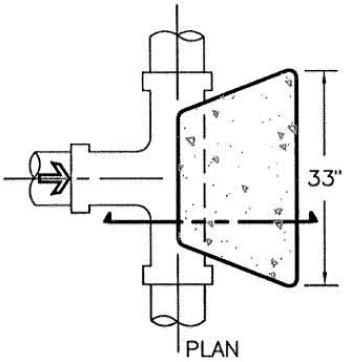

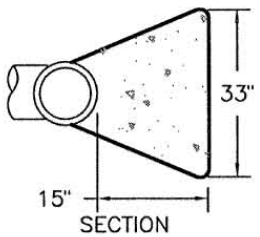

TEES
N.T.S.

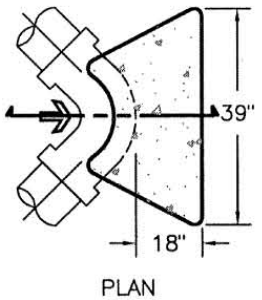

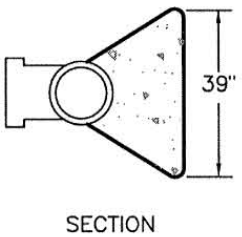

90°BEND
N.T.S.

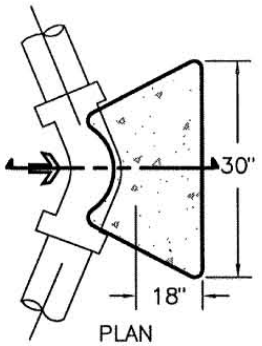

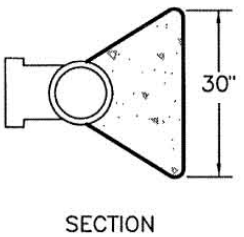

45°BEND
N.T.S.

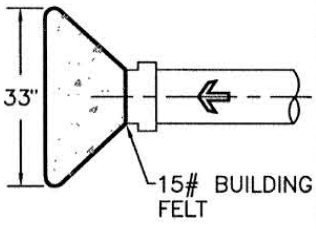

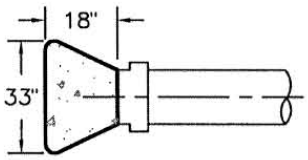

PLUG
N.T.S.

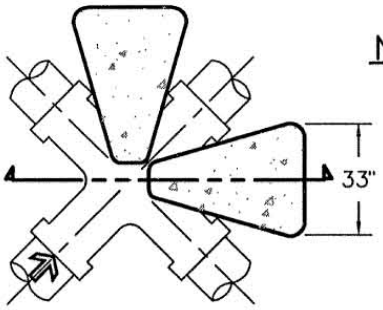

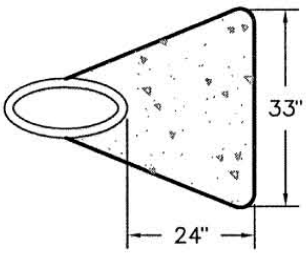

CROSSES
N.T.S.

NOTES:

1. CAST ALL THRUST BLOCKS AGAINST UNDISTURBED SOIL. THE MINIMUM THICKNESS BETWEEN FITTING AND SOIL SHALL BE 12".
2. ALL THRUST BLOCK DIMENSIONS SHOWN ARE FOR AN 8" PIPE OR SMALLER. SEE W-4A AND W-4B FOR 10" AND 12" PIPE. LARGER DIAMETERS OF PIPE REQUIRE DESIGN OF THRUST BLOCKS AND SUBMITTAL TO CITY ENGINEER FOR APPROVAL ASSUMING SOIL BEARING =1000 PSF & PRESSURE=100 PSI
3. CONCRETE SHALL BE CLASS "B" PER SECTION 7 OF THE STANDARD SPECIFICATIONS.
4. ⇨ INDICATES THRUST DIRECTION. WHERE THRUST DIRECTION DIFFERS, ALTERNATE THRUST BLOCK DESIGN WILL BE REQUIRED.
5. PROJECT ENGINEER MAY SUBMIT SOILS REPORT AND CALCULATIONS TO JUSTIFY LESSER THRUST BLOCKS. USE 150 PSI FOR DESIGN.
6. RESTRAINED JOINTS MAY BE USED IN LIEU OF THRUST BLOCKS. SUBMIT TO CITY PRIOR TO CONSTRUCTION.
7. NTS=NOT TO SCALE

THRUST BLOCKS 10" PIPE	Rev.	Date: 10/1/03 Gary A. Tow City Engineer	STD. NO. W-4A

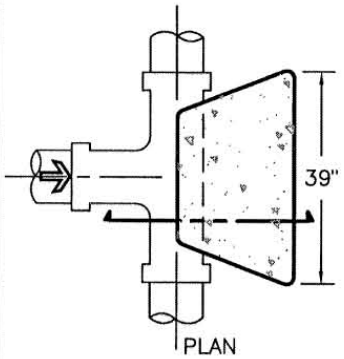

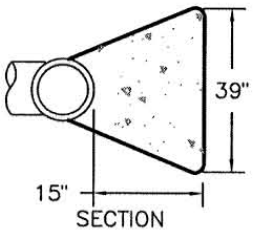

TEES
N.T.S.

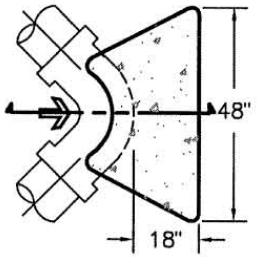

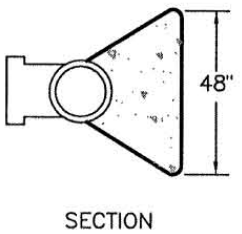

90°BEND
N.T.S.

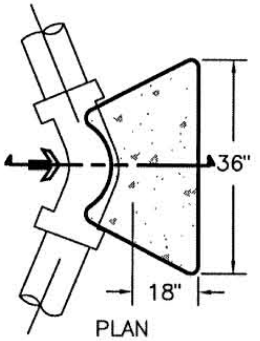

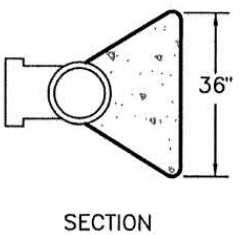

45°BEND
N.T.S.

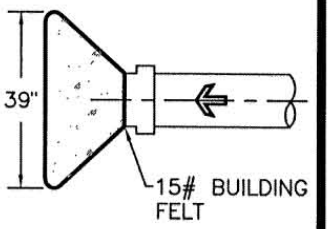

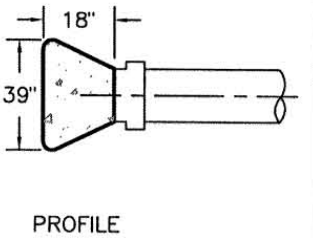

PLUG
N.T.S.

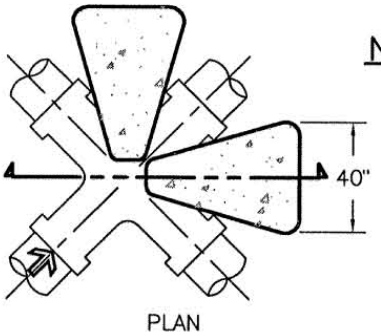

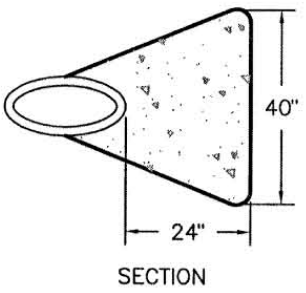

CROSSES
N.T.S.

NOTES:

1. CAST ALL THRUST BLOCKS AGAINST UNDISTURBED SOIL. THE MINIMUM THICKNESS BETWEEN FITTING AND SOIL SHALL BE 12".
2. ALL THRUST BLOCK DIMENSIONS SHOWN ARE FOR AN 8" PIPE OR SMALLER. SEE W-4A AND W-4B FOR 10" AND 12" PIPE. LARGER DIAMETERS OF PIPE REQUIRE DESIGN OF THRUST BLOCKS AND SUBMITTAL TO CITY ENGINEER FOR APPROVAL ASSUMING SOIL BEARING =1000 PSF & PRESSURE=100 PSI
3. CONCRETE SHALL BE CLASS "B" PER SECTION 7 OF THE STANDARD SPECIFICATIONS.
4. ⇨ INDICATES THRUST DIRECTION. WHERE THRUST DIRECTION DIFFERS, ALTERNATE THRUST BLOCK DESIGN WILL BE REQUIRED.
5. PROJECT ENGINEER MAY SUBMIT SOILS REPORT AND CALCULATIONS TO JUSTIFY LESSER THRUST BLOCKS. USE 150 PSI FOR DESIGN.
6. RESTRAINED JOINTS MAY BE USED IN LIEU OF THRUST BLOCKS. SUBMIT TO CITY PRIOR TO CONSTRUCTION.
7. NTS=NOT TO SCALE

THRUST BLOCKS 12" PIPE	Rev.	Date: 10/1/03 Harry A. Tow City Engineer	STD. NO. W-4B

FIRE HYDRANT

NOTES:

1. HYDRANT TO BE JONES J–3740 OR CLOW 2050 IN RESIDENTIAL AREAS OR JONES J–3760 OR CLOW 2060 IN COMMERCIAL AREAS, OR EQUAL WITH TWO 2–1/2" AND ONE 4–1/2" PUMPER HOOK–UP; WET BARREL TYPE COMPLETE WITH 42" BURY, DRAIN HOLE TO BE PLUGGED.
2. FOR HYDRANT LATERALS EXCEEDING 50', ONLY THE FIRST TWO PIPE JOINTS DIRECTLY CONNECT TO THE GATE VALVE. THE VERTICAL ELBOW MUST BE DUCTILE IRON; INTERMEDIATE JOINTS MAY BE PVC.
3. UNDER CERTAIN CONDITIONS, SUCH AS A LONG HYDRANT LATERAL RUN, THE CITY ENGINEER MAY REQUIRE INSTALLATION OF AN 8 INCH HYDRANT LATERAL. FOR AN 8 INCH LATERAL, INSTALL A 6"x8" REDUCER ON THE VERTICAL ELBOW.
4. HYDRANT PLACEMENT:
   FOR CONTIGUOUS SIDEWALK PATTERN, HYDRANT PLACEMENT SHALL BE 7'0" BEHIND FACE OF CURB AS SHOWN.
   FOR ALL OTHER CONDITIONS, HYDRANT PLACEMENT SHALL BE 30" BEHIND FACE OF CURB.
5. ALL FIRE HYDRANTS TO BE BRONZE TYPE INCLUDING CAPS.
6. ALL FIRE HYDRANTS SHALL BE PAINTED CATERPILLAR YELLOW.

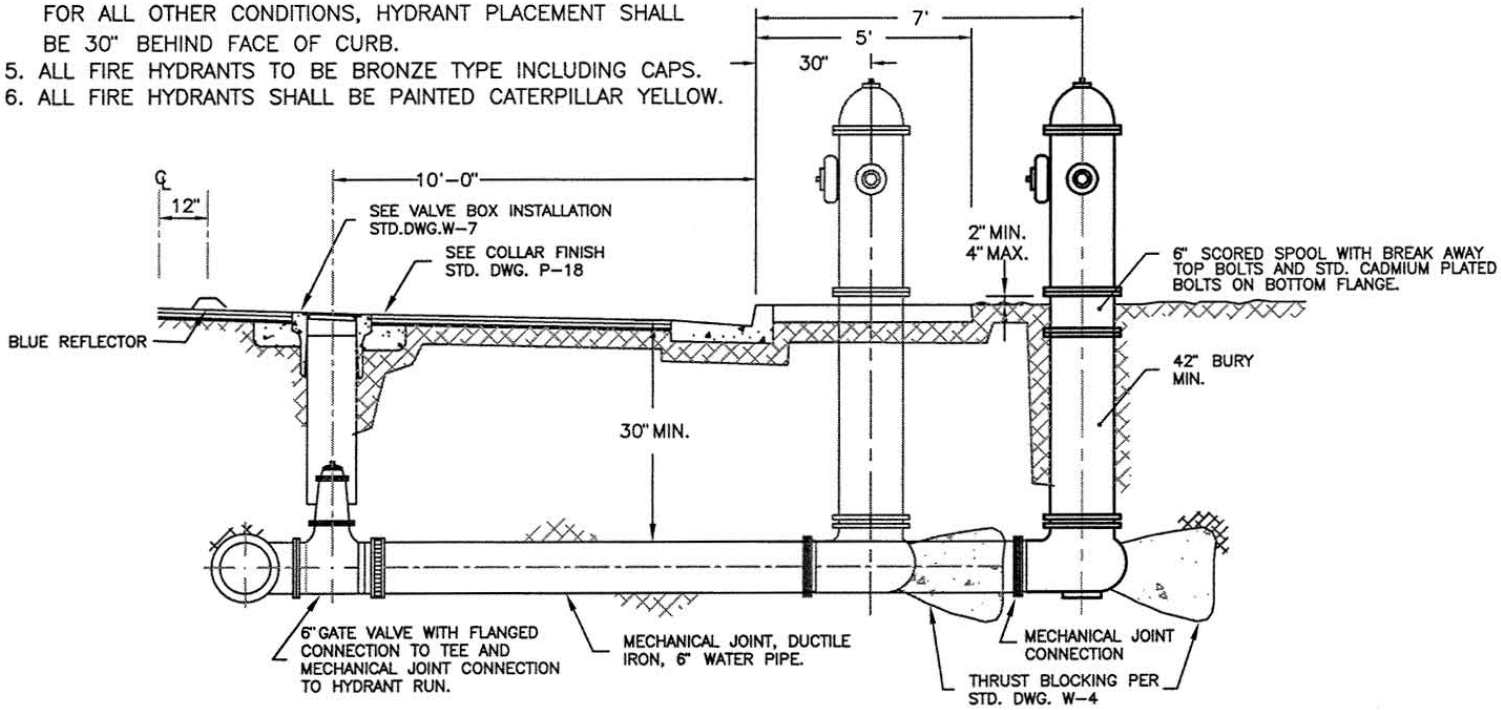

FIRE HYDRANT INSTALLATION PROFILE

N.T.S.

Rev.

Date: 10/1/03

City Engineer

STD. NO. W-5

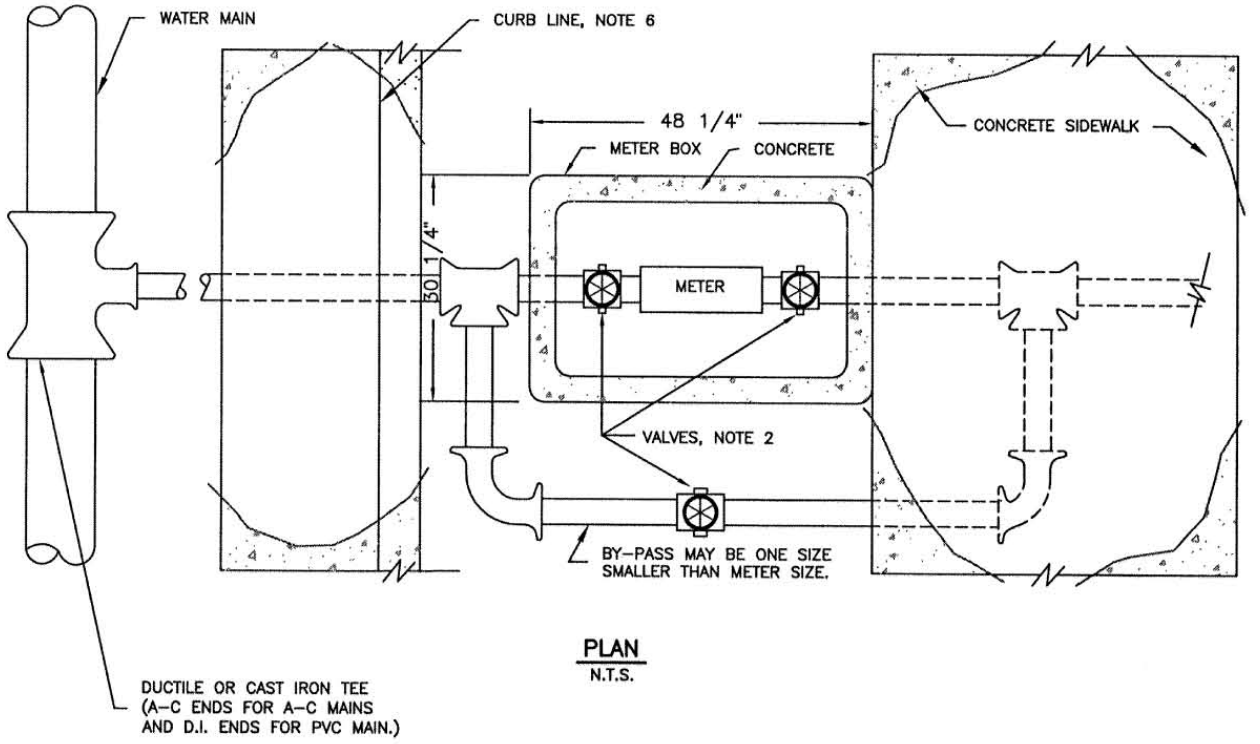

PLAN
N.T.S.

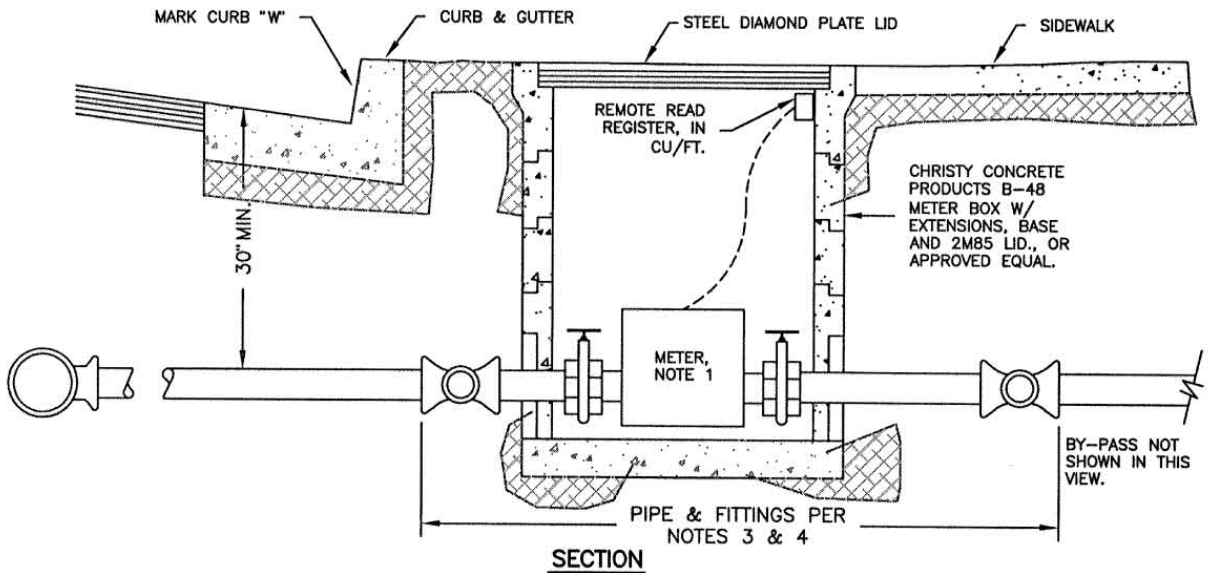

SECTION
N.T.S.

NOTES:

1. METER TO BE EITHER CENSUS METER OR MASTER METER WITH CENSUS PROTOCOL TOUCHREAD TECHNOLOGY, OR EQUAL WITH REMOTE READ REGISTER.
2. VALVES SHALL BE PER "STANDARD SPECIFICATIONS FOR GATE VALVE ASSEMBLIES" AND SHALL HAVE A RESILIENT SEAT OR WEDGE.
3. ALL TEES AND ELBOWS WITHIN THE LIMITS SHOWN SHALL BE CAST OR DUCTILE IRON WITH THREADED OR BOLTED FLANGE CONNECTIONS. WRAP FITTING PER NOTE 4.
4. ALL PIPING WITHIN THE LIMITS SHOWN SHALL BE DUCTILE IRON AND CI/DI FITTINGS SHALL BE WRAPPED PER "STD. SPECS. FOR PLASTIC FILM WRAP OF VALVES, BOLTED FLANGES AND OTHER BOLTED FITTINGS."
5. IN CASES WHERE SIDEWALK AND CURB ARE ADJACENT, ASSUME THE BACK OF SIDEWALK TO BE BACK OF CURB AS SHOWN ON DRAWING.
6. 2" METER WILL BE SUPPLIED BY CITY. METER SPECS MUST BE APPROVED BY CITY REP. BEFORE INSTALLATION.

SERVICE CONNECTION 2" METER BOX INSTALLATION	Rev.	Date: 10/1/03 Larry A. Tow City Engineer	STD. NO. W-6

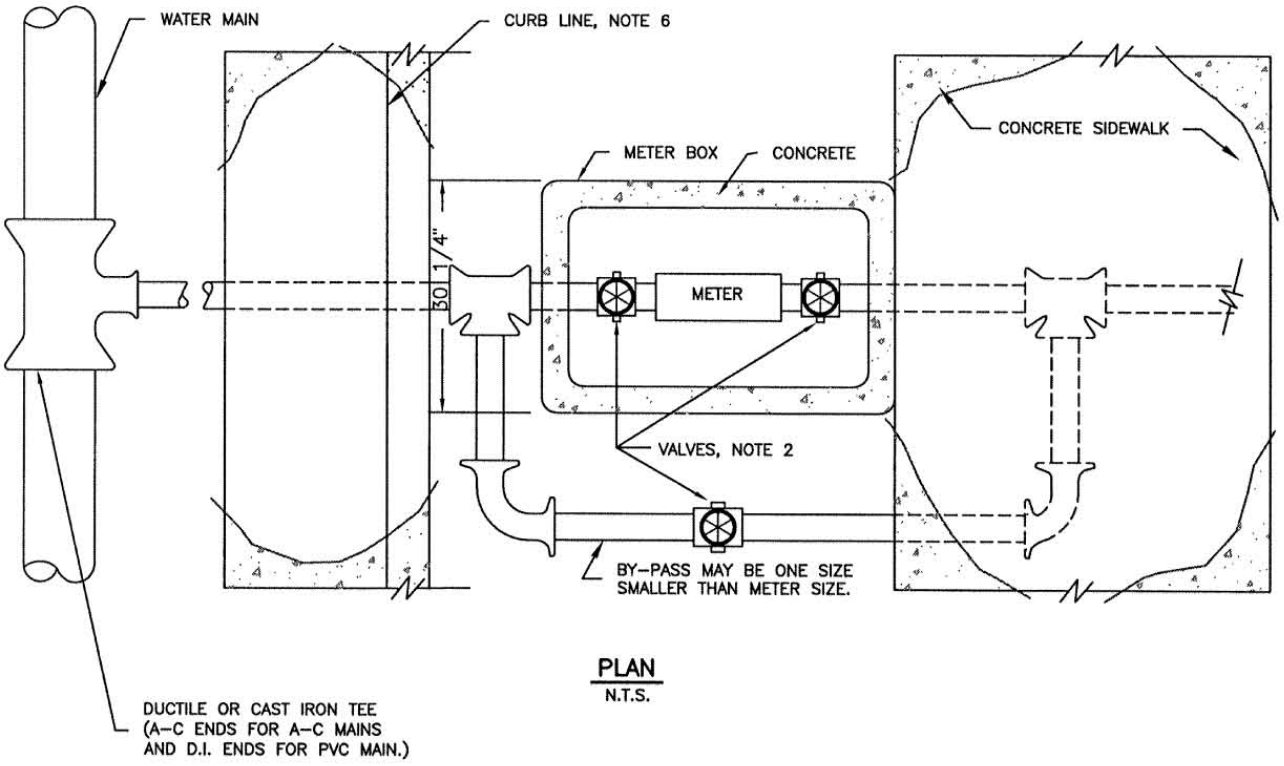

PLAN
N.T.S.

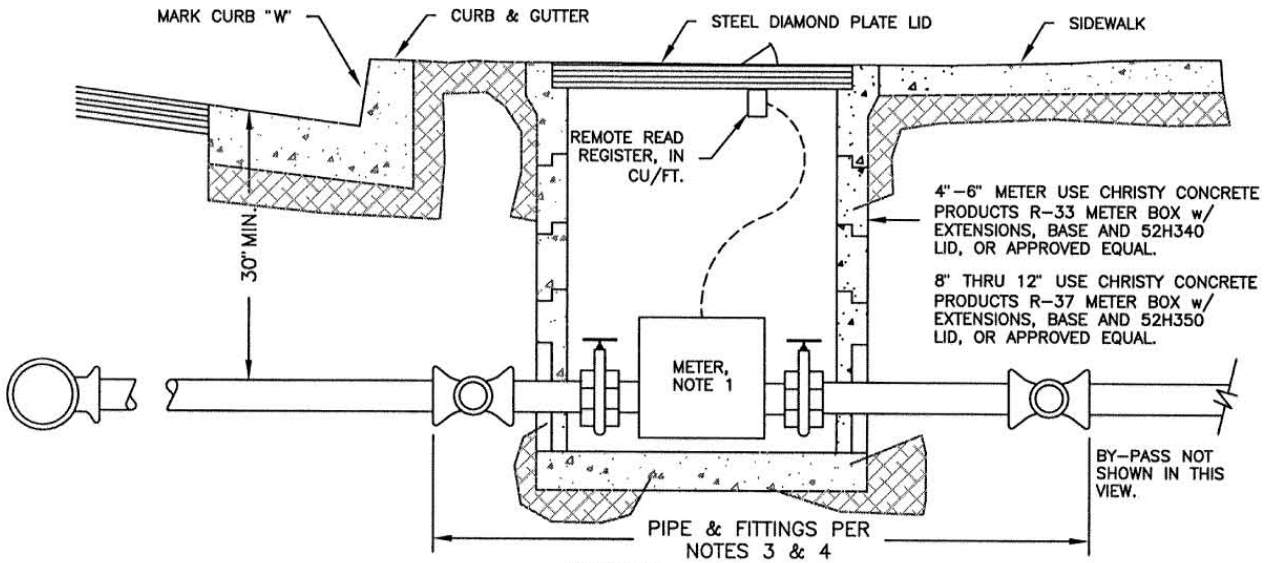

SECTION
N.T.S.

NOTES:

1. METER TO BE EITHER BADGER SINGLE REGISTER OR NEPTUNE FULL FLOW COMPOUND METER, OR EQUAL WITH REMOTE READ REGISTER.
2. VALVES SHALL BE PER "STANDARD SPECIFICATIONS FOR GATE VALVE ASSEMBLIES" AND SHALL HAVE A RESILIENT SEAT OR WEDGE.
3. ALL TEES AND ELBOWS WITHIN THE LIMITS SHOWN SHALL BE CAST OR DUCTILE IRON WITH THREADED OR BOLTED FLANGE CONNECTIONS. WRAP FITTING PER NOTE 4.
4. ALL PIPING WITHIN THE LIMITS SHOWN SHALL BE DUCTILE IRON AND CI/DI FITTINGS SHALL BE WRAPPED PER "STD. SPECS. FOR PLASTIC FILM WRAP OF VALVES, BOLTED FLANGES AND OTHER BOLTED FITTINGS."
5. IN CASES WHERE SIDEWALK AND CURB ARE ADJACENT, ASSUME THE BACK OF SIDEWALK TO BE BACK OF CURB AS SHOWN ON DRAWING.
6. METER 4" AND LARGER WILL NOT BE SUPPLIED BY CITY, ALL METERS PROPOSED TO BE INSTALLED IN ANY INSTALLATION, MUST BE APPROVED BY CITY REP. BEFORE INSTALLATION.

SERVICE CONNECTION 4" AND ABOVE, METER BOX INSTALLATION	Rev.	Date: 10/1/03 Gary A. Tom City Engineer	STD. NO. W-6A

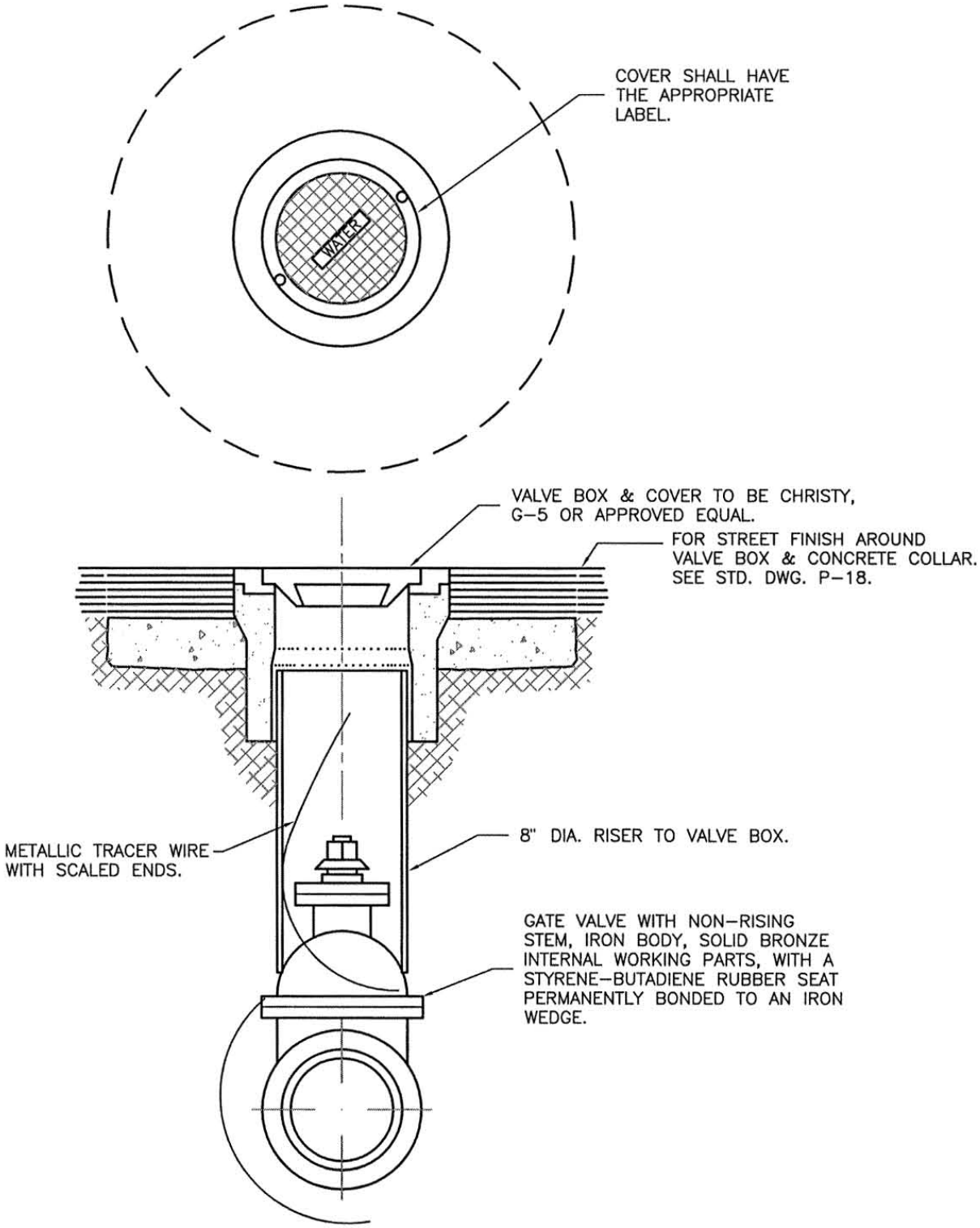

VALVE BOX INSTALLATION	Rev.	Date: 10/1/03 City Engineer	STD. NO. W-7

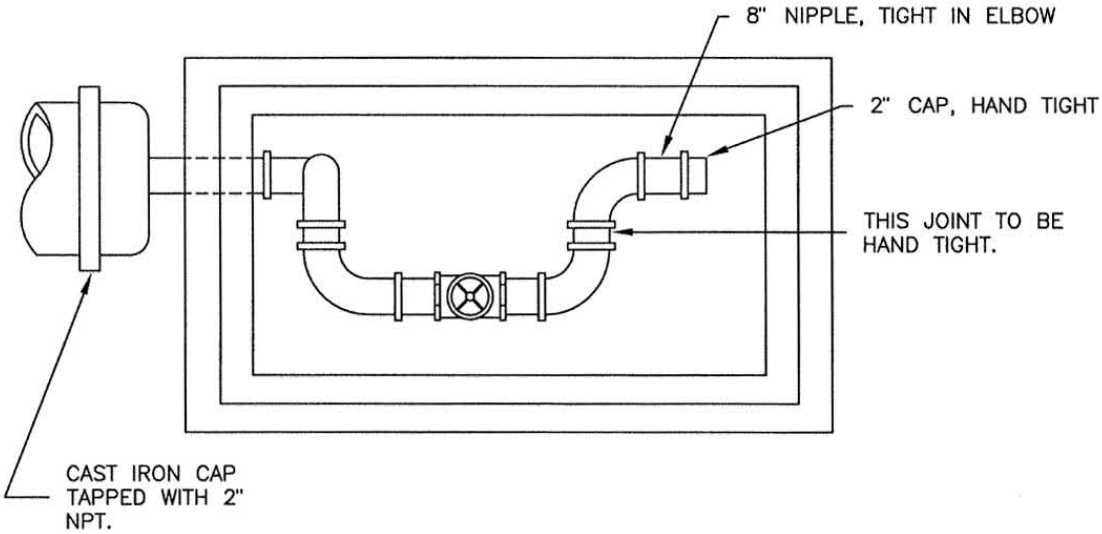

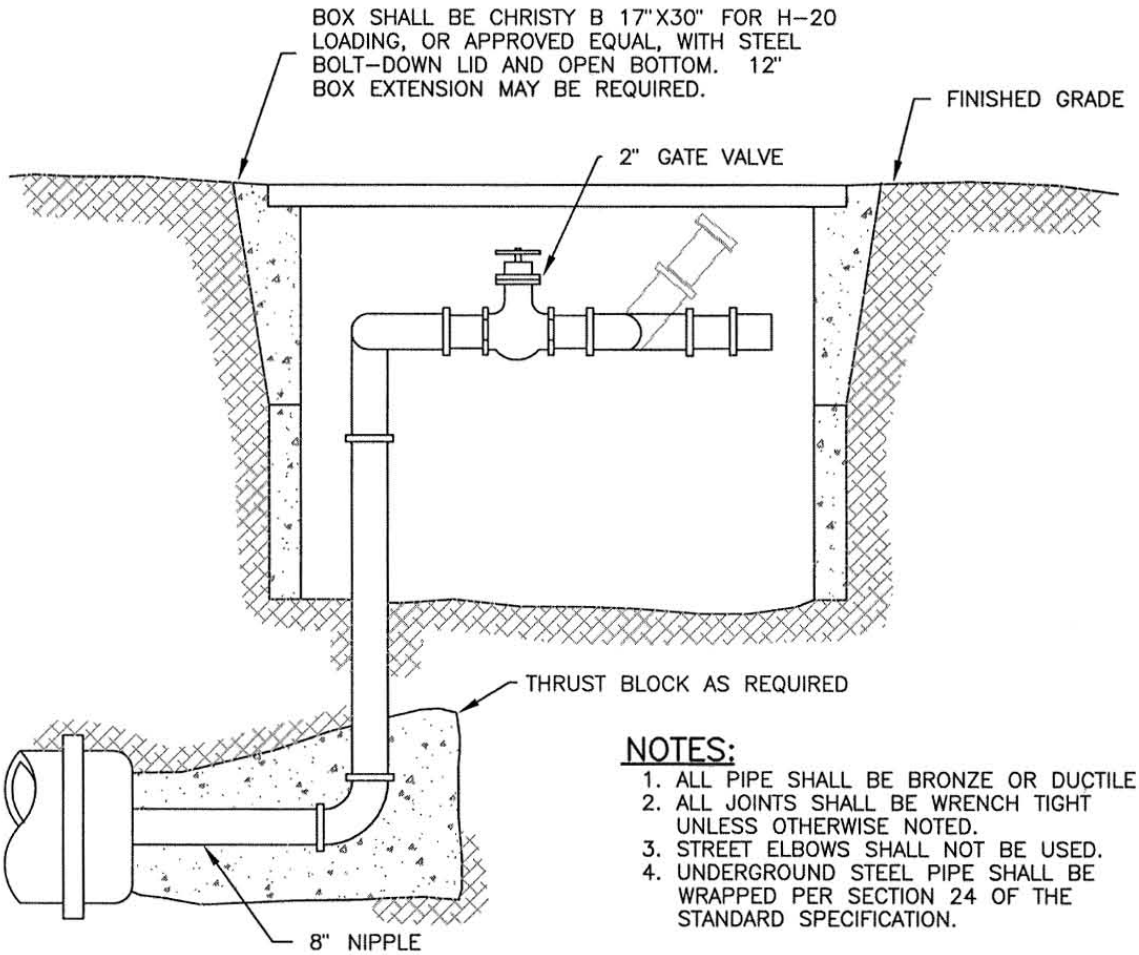

NOTES:

1. ALL PIPE SHALL BE BRONZE OR DUCTILE IRON.
2. ALL JOINTS SHALL BE WRENCH TIGHT UNLESS OTHERWISE NOTED.
3. STREET ELBOWS SHALL NOT BE USED.
4. UNDERGROUND STEEL PIPE SHALL BE WRAPPED PER SECTION 24 OF THE STANDARD SPECIFICATION.

TEMPORARY BLOW-OFF	Rev.	Date: 10/1/03 Harry A. Tow City Engineer	STD. NO. W-8

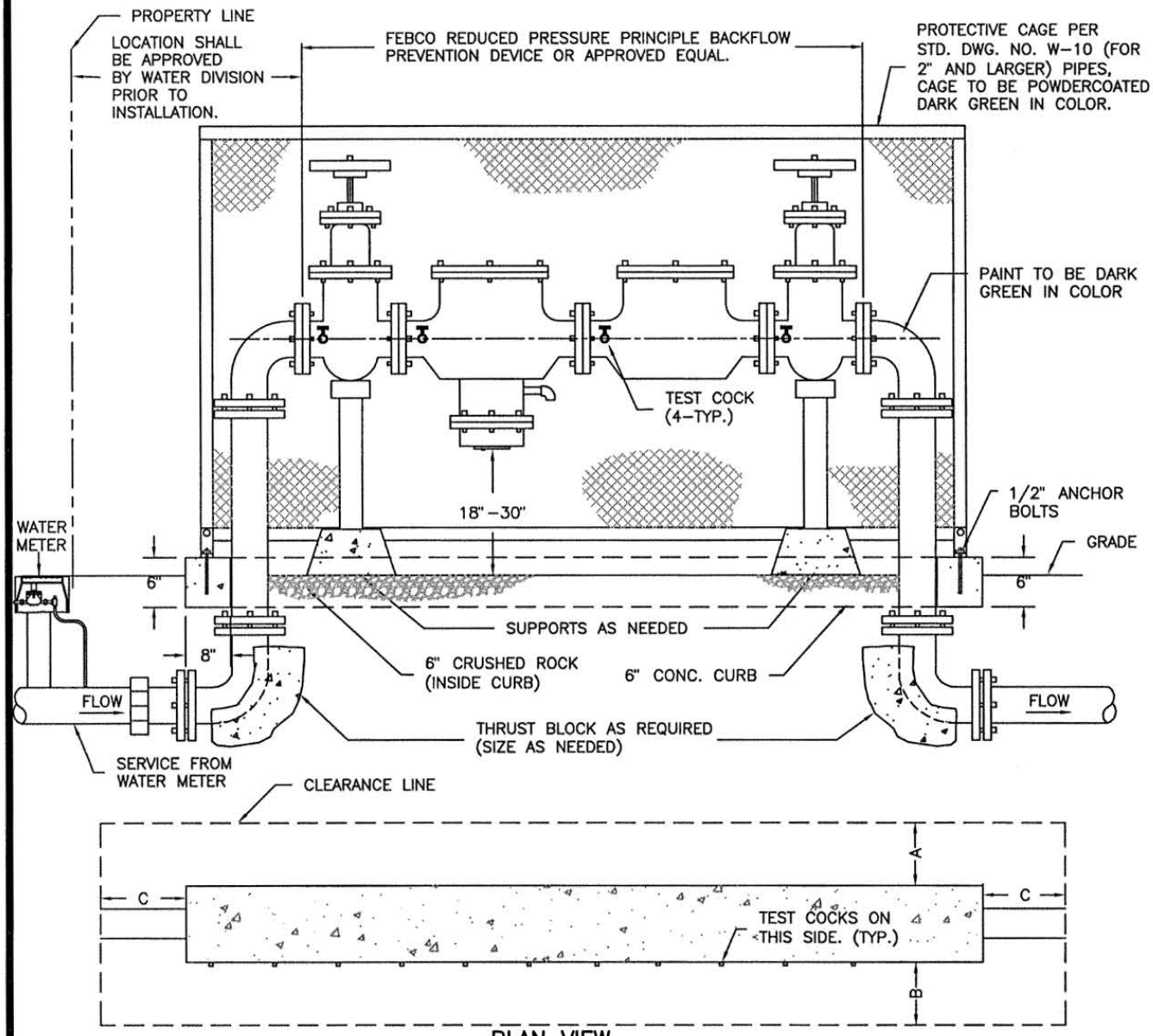

PLAN VIEW

NOTES:

1. GATE VALVES AND TEST COCKS ARE REQUIRED.
2. NO CONNECTIONS OR TEES WILL BE ALLOWED BETWEEN METER AND DEVICE.
3. PROTECTION FROM FREEZE DAMAGE MAY BE REQUIRED IN EXPOSED AREAS.
4. DEVICE MUST BE ACCESSIBLE FOR TESTING AND MAINTENANCE.
5. PROVIDE PROTECTIVE CAGE PER STD. DWG. NO. W-10.
6. THE DEVICES SHALL BE INSTALLED ADJACENT TO AND ON THE PROPERTY SIDE OF THE SIDEWALK WHERE APPLICABLE. THE DEVICE SHALL BE INSTALLED AS CLOSE TO THE WATER METER AS POSSIBLE.
7. THE DEVICE SHALL BE THE SAME SIZE OR LARGER THAN THE SERVICE METER.
8. LANDSCAPING OR OTHER SCREENING AROUND THE DEVICE SHALL BE AS SHOWN ON THE APPROVED LANDSCAPE PLANS.
9. PROVIDE PROTECTIVE CAGE PER STD. DWG. NO W-10.
10. PIPE MUST BE BRONZE OR DUCTILE IRON.
11. BACKFLOW MUST BE CERTIFIED PRIOR TO ACCEPTANCE BY CITY OF LEMOORE
12. SUBMIT BACKFLOW DEVICE FOR ACCEPTANCE BY CITY OF LEMOORE.

MINIMUM CLEARANCE

SIZE	A	B	C
1'-3"	12"	18"	12"
4" & UP	24"	24"	12"
Maximum	36"	36"	36"

REDUCED PRESSURE BACKFLOW DEVICE	Rev.	Date: 10/1/03 Harry A. Tow City Engineer	STD. NO. W-9

NOTES:

1. EXPANDED METAL GRATING TO BE WELDED INSIDE STRUCTURAL SUPPORTS EVERY 5" MIN.
2. ALL DIAGONAL & CIRCULAR CUT EXPOSED EDGES SHALL BE BANDED WITH A BAR EQUAL TO THE OVER ALL GRATING THICKNESS AND WELDED AT ALL CONTACT POINTS.
3. HINGE SHALL BE 1/2" GALVANIZED BOLT IN TO THE NUT WELDED INSIDE ENCLOSURE. END OF BOLT SHALL BE ALTERED TO PREVENT REMOVAL FROM OUTSIDE ENCLOSURE.
4. WELD ALL 1/2" DIA. ROD INTERSECTIONS WITH 3/8" FILLET WELDS. 5. CURB SHALL BE 6" THICK CLASS "A" CONCRETE.
6. ALL PIPING EXTENDING THROUGH CONCRETE CURB SHALL BE WRAPPED WITH 20 MIL. PLUMBERS TAPE.
7. ALL EXPOSED PARTS SHALL BE PRIMERED AND PAINTED WITH RUST PREVENTIVE PAINT.
8. ENCLOSURE DIMENSIONS WILL VARY DEPENDING ON SIZE AND TYPE OF EQUIPMENT.

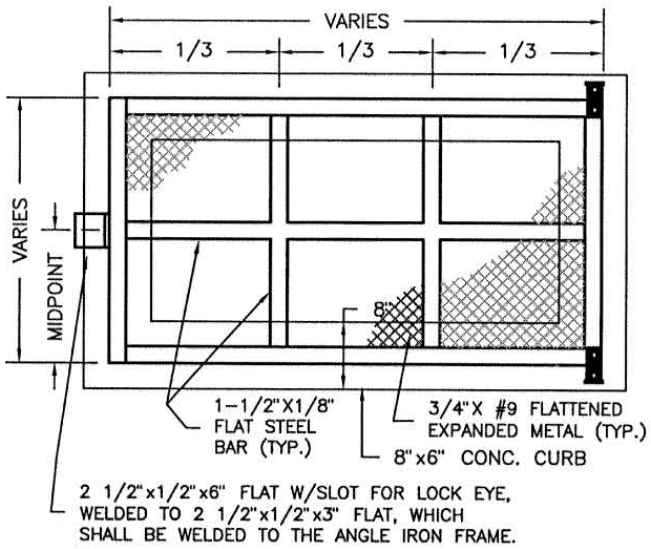

TOP VIEW
N.T.S.

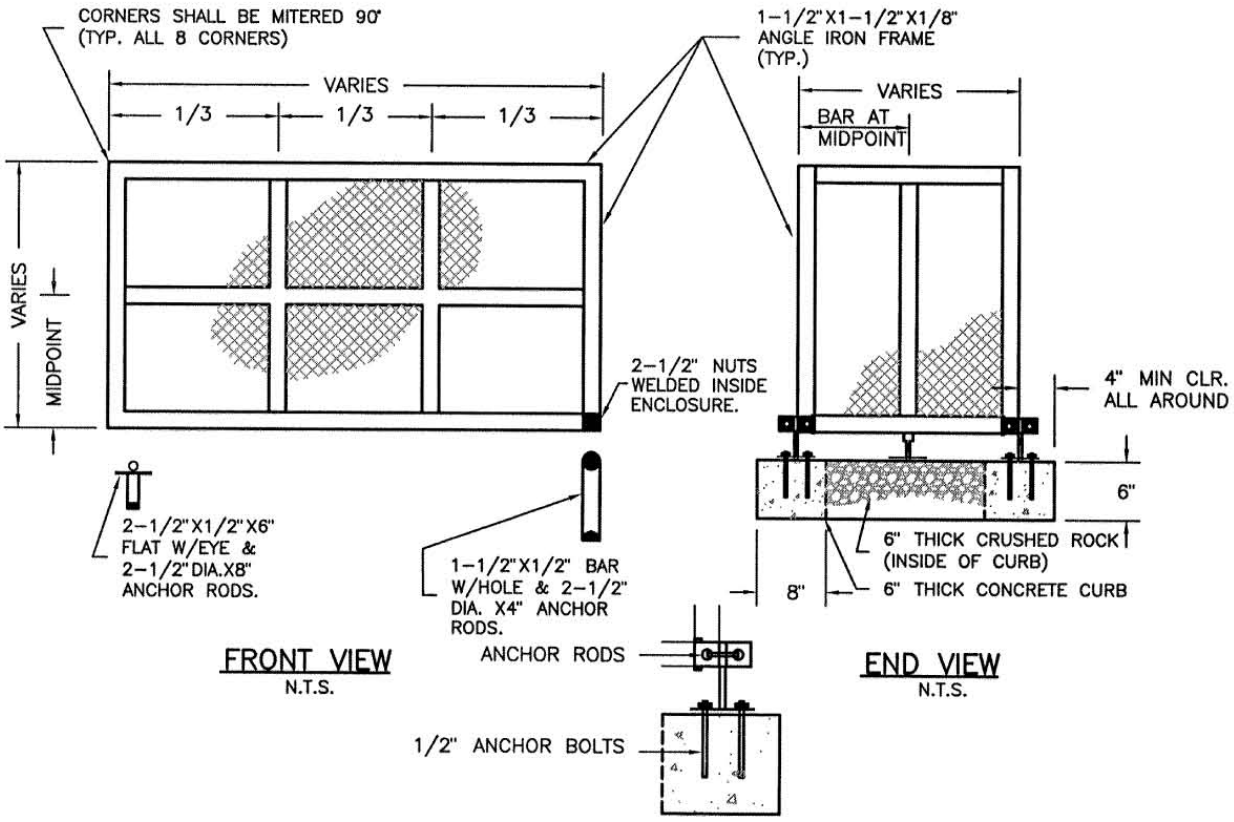

FRONT VIEW
N.T.S.

END VIEW
N.T.S.

HINGE CONNECTION
N.T.S.

PROTECTIVE CAGE	Rev.	Date: 10/1/03 Larry A. Tow City Engineer	STD. NO. W-10

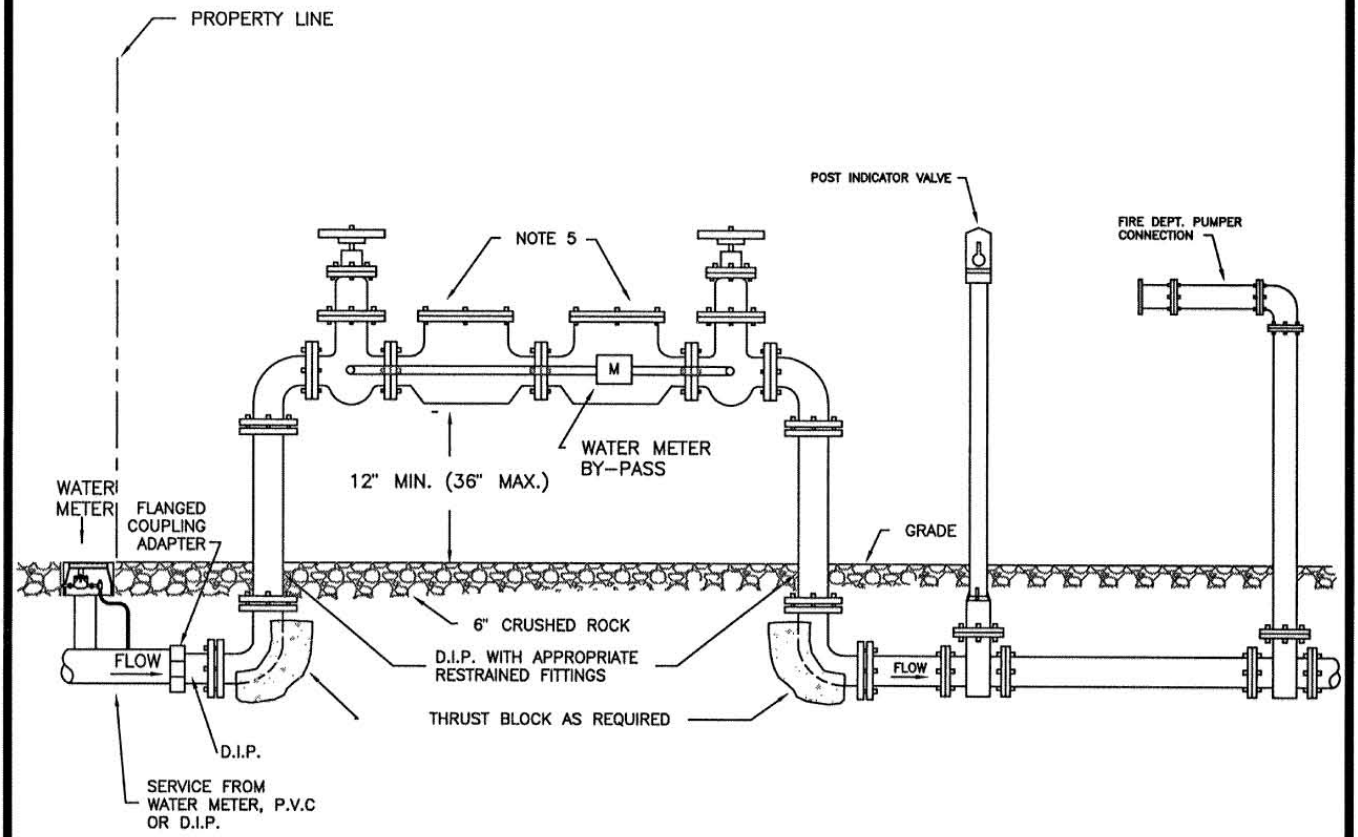

NOTES:

1. BACKFLOW ABOVE GROUND PIPING SHALL BE PAINTED DARK GREEN.
2. LOCATION TO BE APPROVED BY THE FIRE DEPARTMENT.
3. ALL ABOVE GROUND VALVES AND POST INDICATOR VALVES SHALL BE EQUIPPED WITH TAMPER SWITCH DEVICES AS APPROVED BY THE FIRE DEPARTMENT.
4. COMPLETE INSTALLATION SHALL BE PLUMB AND LEVEL.
5. U.S.C. APPROVED DOUBLE DETECTOR CHECK VALVE ASSEMBLY– W/O.S. & Y. GATE VALVE CHAINED IN OPEN POSITION. BYPASS PIPING TO INCLUDE DOUBLE CHECK VALVE AND METER.
6. BACKFLOW MUST BE CERTIFIED AFTER INSTALLATION AND A COPY OF THE CERTIFICATE GIVEN TO THE CITY REPRESENTATIVE PRIOR TO ACCEPTANCE BY THE CITY OF LEMOORE.
7. VALVES TO BE CHAINED AND LOCK TOGETHER.
8. FIRE DEPARTMENT PUMPER CONNECTION SHALL BE MAXIMUM 25' TO FIRE HYDRANT.

(FIRE PROTECTION) DOUBLE CHECK DETECTOR ASSEMBLY	Rev.	Date: 10/1/03 Larry A. Tow City Engineer	STD. NO. W-11

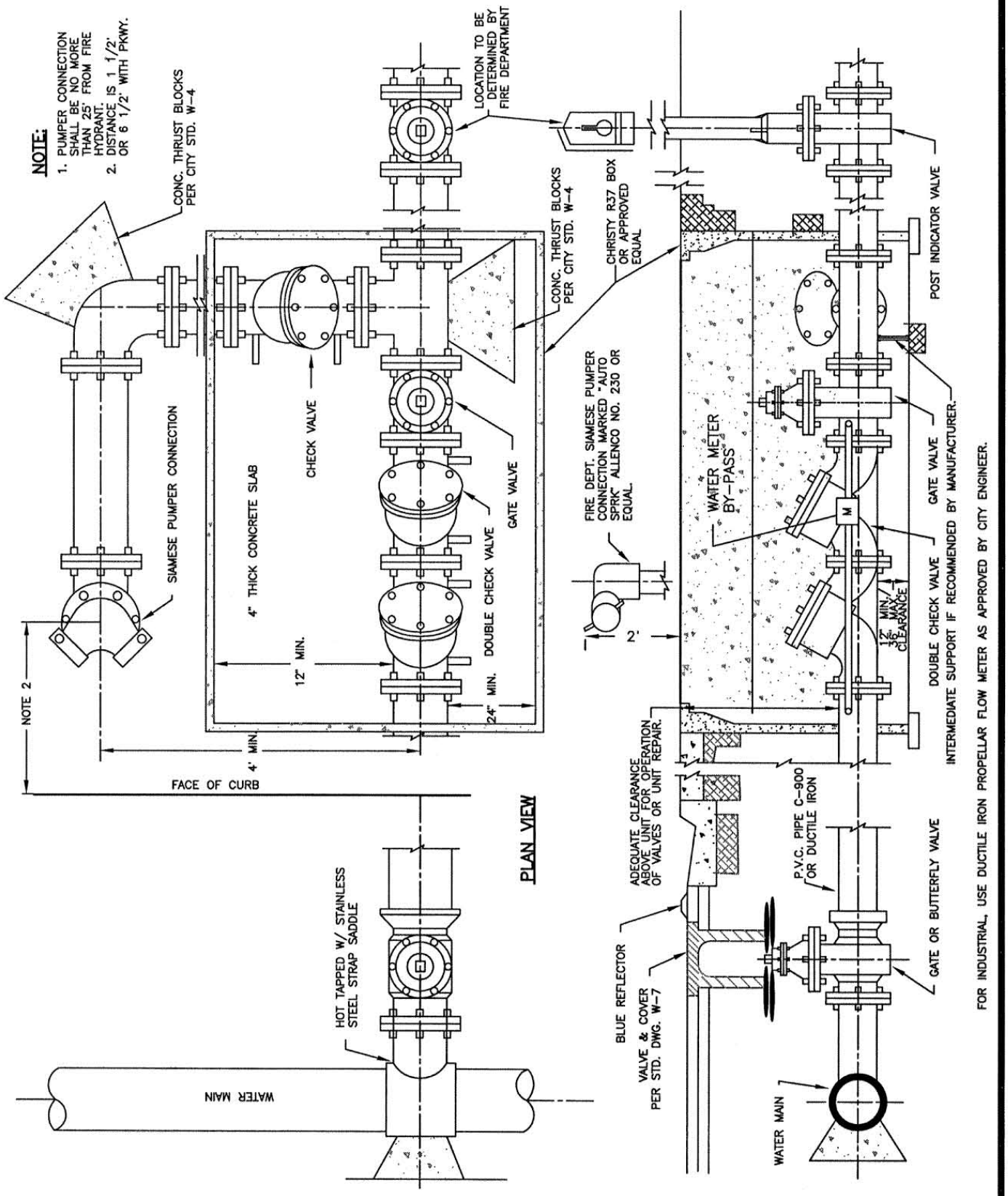

COMMERCIAL FIRE SERVICE AND PUMPER CONNECTION (ALTERNATIVE)	Rev.	Date: 10/1/03 Gary A. Tow City Engineer	STD. NO. W-12

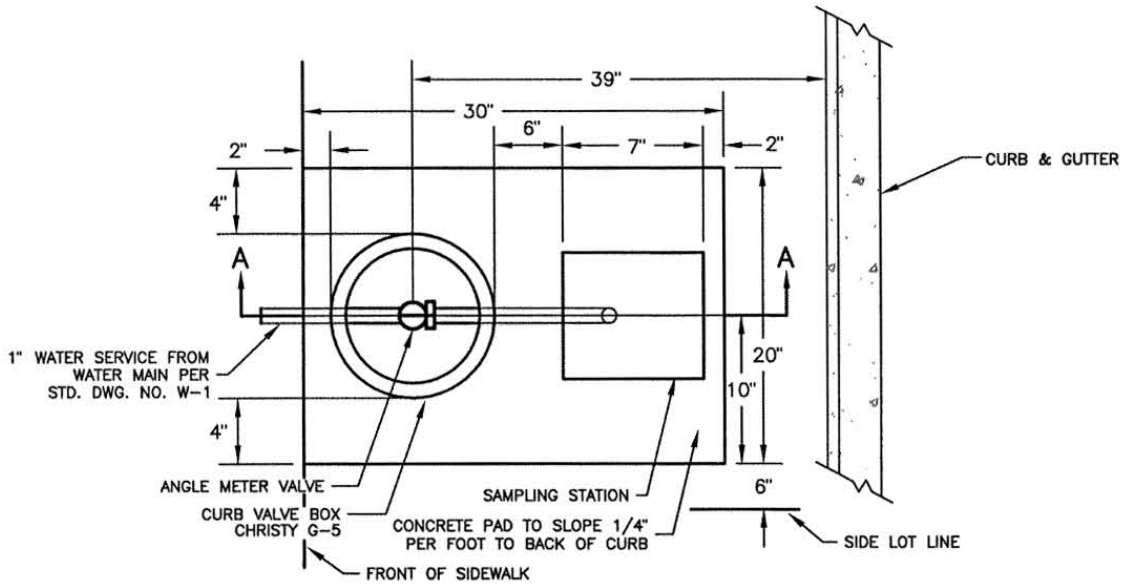

PLAN VIEW
N.T.S.

NOTES:

1. BEFORE INSTALLATION OF SAMPLING STATION, CONTACT CITY OF LEMOORE WATER DIVISION AT (559) 925-2806 FOR INSPECTION AND INFO. ON APPROVED FITTINGS TO BE USED.

2. THE STATIONS AND THEIR LOCATIONS WILL BE DETERMINED BY THE CITY ENGINEER TO COMPLY WITH THE REQUIREMENTS OF THE STATE OF CALIFORNIA DEPARTMENT OF HEALTH SERVICES.

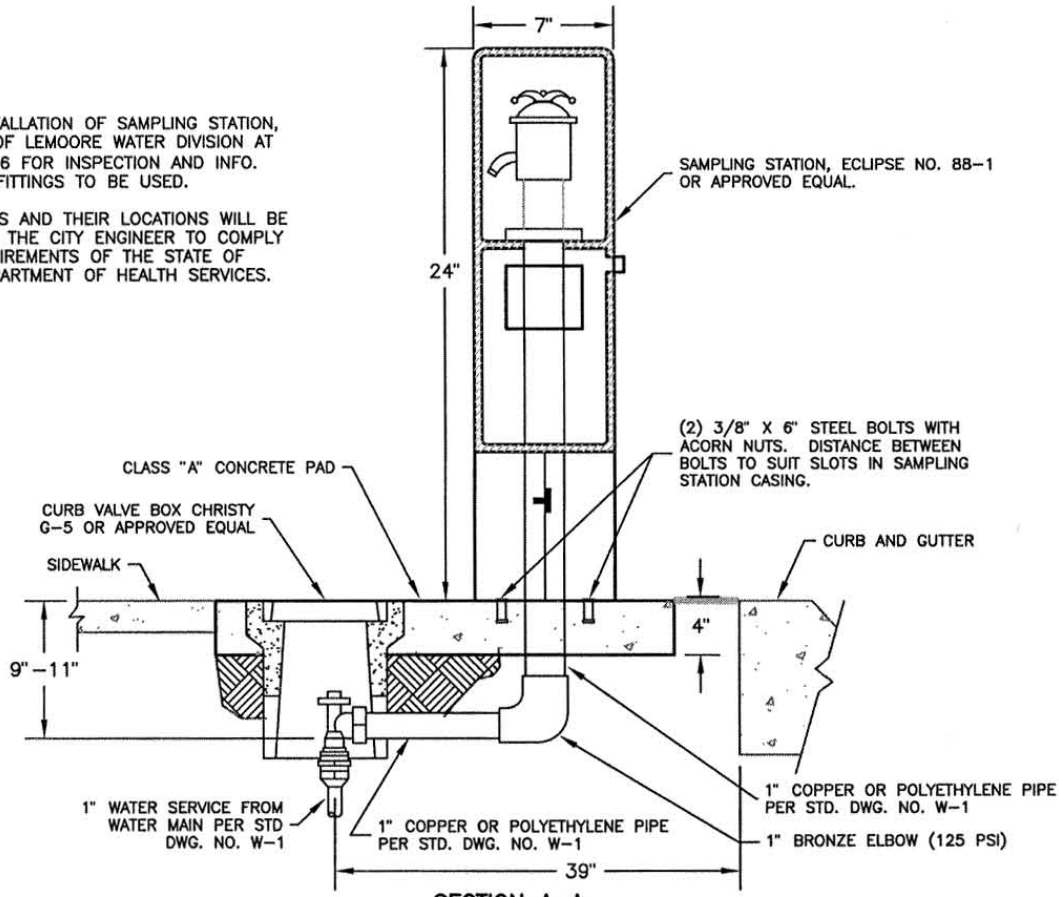

SECTION A-A
N.T.S.

WATER SAMPLING STATION	Rev.	Date: 10/1/03 City Engineer	STD. NO. W-13

A. IMPERVIOUS SEALING MATERIAL

SUITABLE MATERIALS INCLUDE NEAT CEMENT, CEMENT GROUT, CONCRETE BENTONITE CLAYS (MUDS). USED DRILLED MUDS ARE NOT ACCEPTABLE.

1. A NEAT CEMENT MIXTURE SHALL BE COMPOSED OF ONE BAG OF PORTLAND CEMENT TO 6 TO 7 GALLONS OF CLEAN WATER.

2. CEMENT GROUT SHALL BE COMPOSED OF NOT MORE THAN TWO PARTS OF SAND AND ONE PART OF CEMENT (PER BAG OF CEMENT) TO 6 TO 7 GALLONS OF CLEAN WATER.

B. PLACEMENT OF MATERIALS

THE FOLLOWING REQUIREMENTS SHALL BE OBSERVED IN PLACING MATERIAL IN THE WELLS TO BE DESTROYED:

1. THE WELL SHALL BE FILLED WITH THE APPROPRIATE MATERIAL FROM THE BOTTOM OF THE WELL UP.

2. WHERE NEAT CEMENT, CEMENT GROUT, OR CONCRETE IS USED, IT SHALL BE POURED IN ONE CONTINUOUS OPERATION.

3. IMPERVIOUS FILL MATERIALS SHALL BE PLACED IN THE INTERVAL OR INTERVALS TO BE SEALED BY METHODS THAT PREVENT FREE FALL, DILUTION, AND/OR SEPARATION OF AGGREGATES FROM CEMENTING MATERIALS.

4. IN DESTROYING GRAVEL–PACKED WELLS, THE CASING SHALL BE PERFORATED OR OTHERWISE PUNCTURED OPPOSITE THE AREA TO BE SEALED. THE SEALING MATERIAL SHALL THEN BE PLACED WITHIN THE CASING, COMPLETELY FILLING THE PORTION ADJACENT TO THE AREA TO BE SEALED AND THEN FORCED OUT UNDER PRESSURE INTO THE GRAVEL ENVELOPE. THE PRESSURE SHALL BE MAINTAINED FOR A LENGTH OF TIME SUFFICIENT FOR THE CEMENTING MIXTURE TO SET.

C. ALL REQUIREMENTS FOR DESTROYING WELLS

1. SHALL COMPLY WITH SECTION 23 OF THE STATE DEPARTMENT OF WATER RESOURCES, "WATER WELL STANDARDS", BULLETIN #74.

2. A PERMIT SHALL BE OBTAINED FROM THE CITY OF LEMOORE AND KINGS COUNTY PRIOR TO ABANDONMENT.

3. CITY INSPECTOR SHALL BE ON SITE DURING WELL ABANDONMENT.

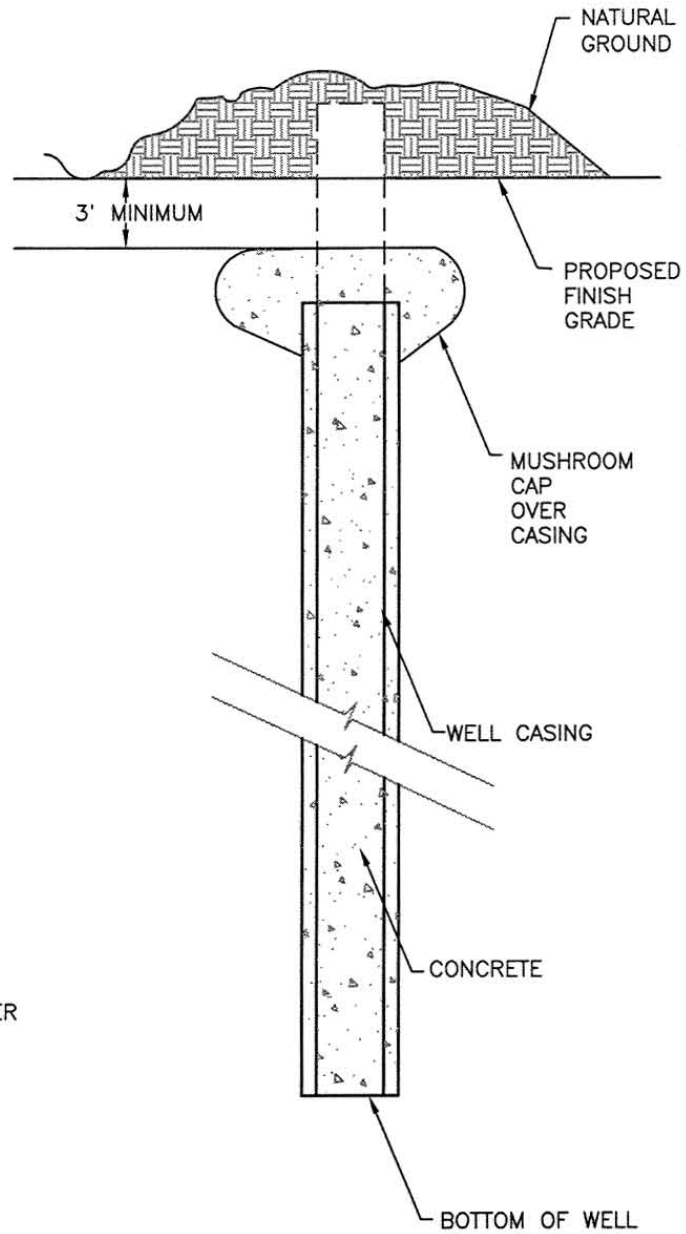

ABANDONMENT OF EXISTING WELL

Rev.

Date: 10/1/03

City Engineer

STD. NO. W-14